Non-linear Control Theory and Applications in Power and Energy Systems

George Konstantopoulos

Control and Power Systems
Dept. of Automatic Control and Systems Engineering
The University of Sheffield
United Kingdom

The University Of Sheffield.
CAPS
Control and Power Systems

Outline

- Introduction
- Model of some typical Power & Energy Systems
- Non-linear control theory
  - Dissipative Hamiltonian form
  - Oscillator-based non-linear controller
  - Bounded integral controller (BIC)
- Applications
  - DC/DC boost converter (energy storage, PV)
  - Wind power
  - Parallel operation of inverters
  - Grid-friendly inverters (Synchronverters): CAPS
  - Rectifiers with limited current
- Summary

The University Of Sheffield. CAPS Control and Power Systems

Outline

- Introduction
- Model of some typical Power & Energy Systems
- Non-linear control theory
  - Dissipative Hamiltonian form
  - Oscillator-based non-linear controller
  - Bounded integral controller (BIC)
- Applications
  - DC/DC boost converter (energy storage, PV)
  - Wind power
  - Parallel operation of inverters
  - Grid-friendly inverters (Synchronverters): CAPS
  - Rectifiers with limited current
- Summary

The University Of Sheffield. CAPS Control and Power Systems

Power systems

- Increase of renewable energy systems penetration
  - Connection to the electrical grid through power electronic devices (converters)
- Power grid stability becomes fragile!
- Conventional control techniques and linear systems analysis $\rightarrow$ not enough

Control in Power Systems

Power electronics have high efficiency. Power Grid stability lies on the system operation and control.

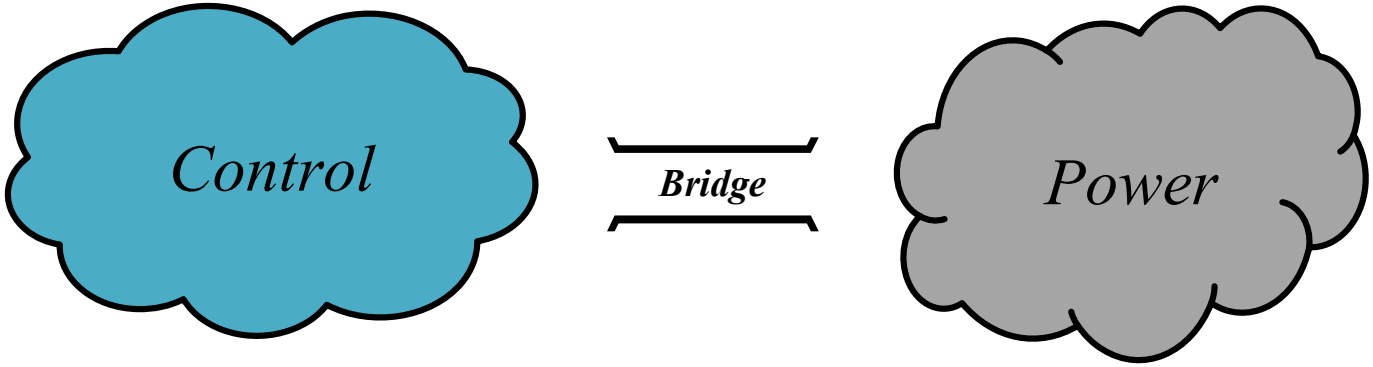

The need to create a bridge between 'automatic control' and 'power systems' communities

- Accurate modelling of power systems
- Advanced control design
- Passivity - Stability

Non-linear control theory is essential!

Control in Power Systems

Power electronics have high efficiency. Power Grid stability lies on the system operation and control.

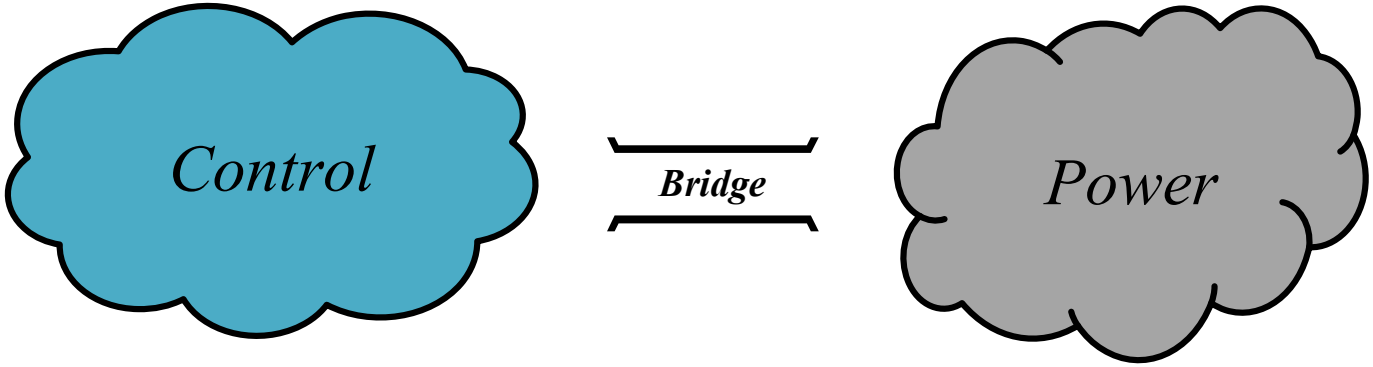

The need to create a bridge between 'automatic control' and 'power systems' communities

- Accurate modelling of power systems
- Advanced control design
- Passivity - Stability

Non-linear control theory is essential!

Control in Power Systems

Power electronics have high efficiency. Power Grid stability lies on the system operation and control.

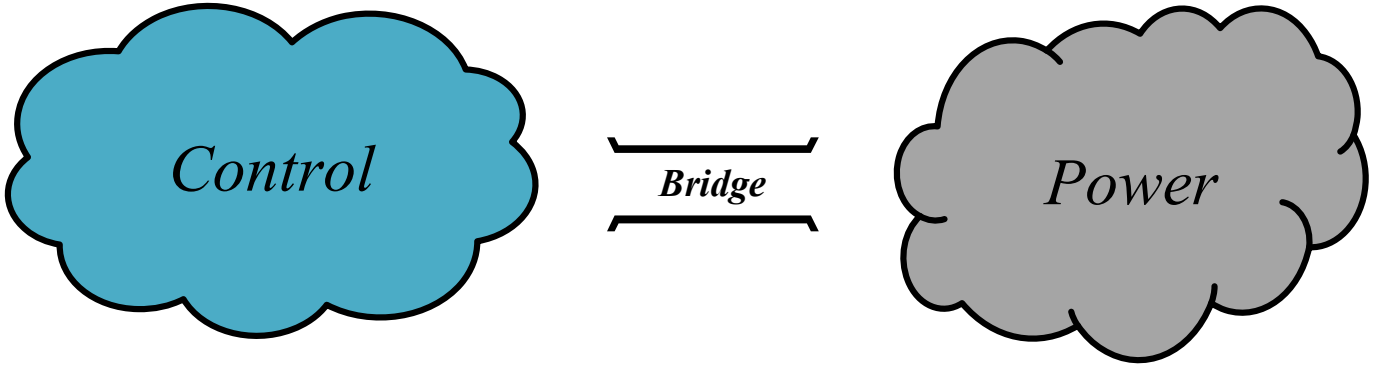

The need to create a bridge between 'automatic control' and 'power systems' communities

- Accurate modelling of power systems
- Advanced control design
- Passivity - Stability

Non-linear control theory is essential!

Outline

- Introduction
- Model of some typical Power & Energy Systems
- Non-linear control theory
  - Dissipative Hamiltonian form
  - Oscillator-based non-linear controller
  - Bounded integral controller (BIC)
- Applications
  - DC/DC boost converter (energy storage, PV)
  - Wind power
  - Parallel operation of inverters
  - Grid-friendly inverters (Synchronverters): CAPS
  - Rectifiers with limited current
- Summary

The University Of Sheffield. CAPS Control and Power Systems

DC/DC boost converter

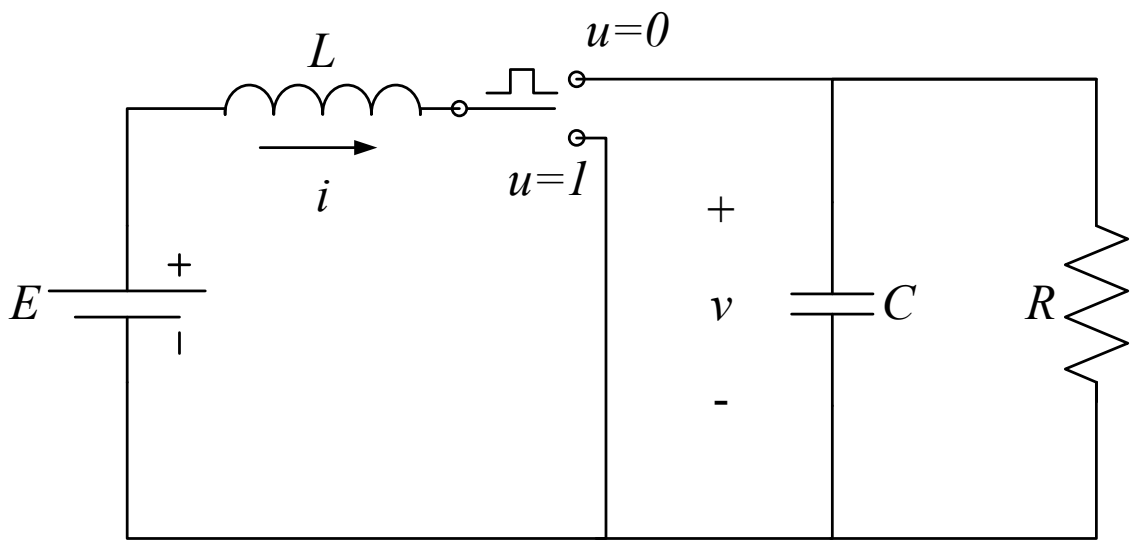

Applications: PV, energy storage, wind, etc.

Aim: Regulation of the dc output voltage v to a higher level than the dc input voltage E by controlling the switch u.

Average model

Average modelling ($u \to \mu$)

- high switching frequency
- duty-ratio $\mu = \frac{t_{on}}{T}$

$$L\dot{i} = -(1-\mu)v + E$$
$$C\dot{v} = (1-\mu)i - \frac{1}{R}v$$

where the control input μ is continuous-time and $\mu \in [0,1]$.

The system is non-linear!

AC/DC or DC/AC converter

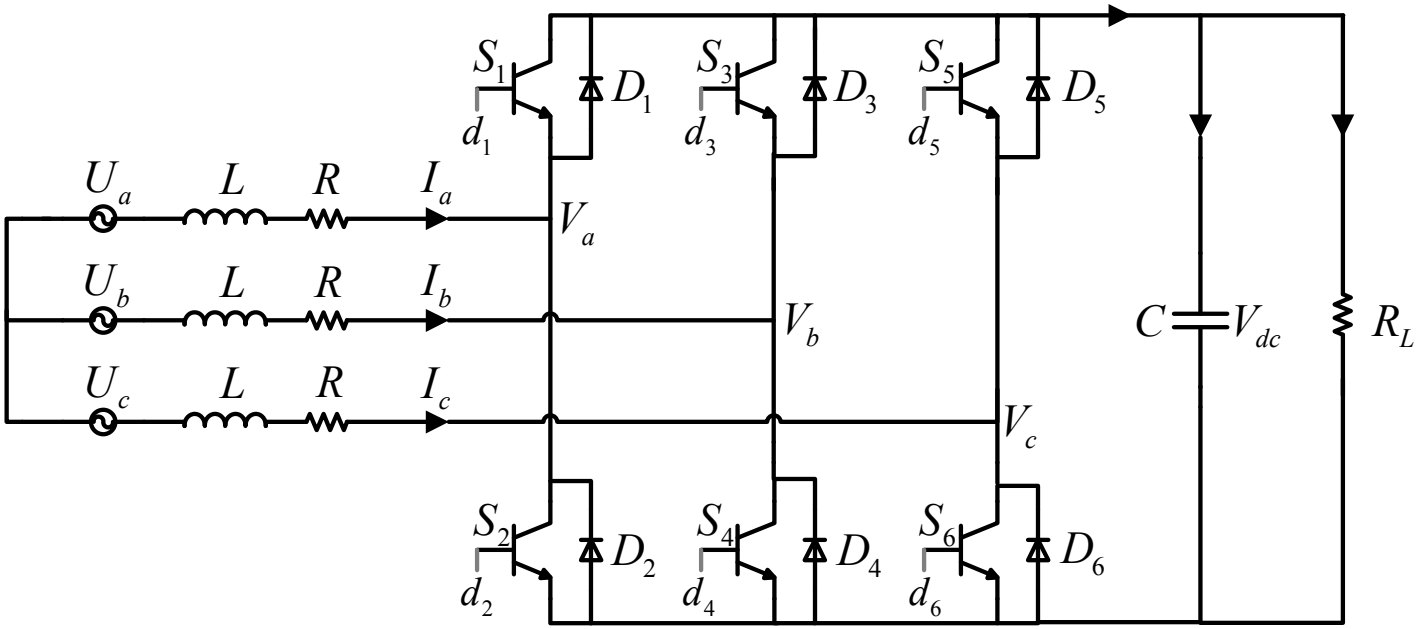

Average modelling

+

Park transformation $(a - b - c \rightarrow d - q)$

Average model

$$L\dot{i}_d = -Ri_d + \omega_s L i_d - m_d \frac{V_{dc}}{2} + U_d$$

$$L\dot{i}_q = -Ri_q - \omega_s L i_q - m_q \frac{V_{dc}}{2} + U_q$$

$$C\dot{V}_{dc} = \frac{3}{4}(m_d i_d + m_q i_q) - \frac{V_{dc}}{R_L}$$

- external uncontrolled inputs: grid voltages U_d, U_q (constants, usually $U_q = 0$)
- control inputs: duty-ratio signals $m_d = \frac{2V_d}{V_{dc}}$, $m_q = \frac{2V_q}{V_{dc}}$

In order to operate the converter in the 'linear modulation' (PWM):

$$m_d^2 + m_q^2 \leq 1$$

Existing control techniques

Traditional techniques:

- linearisation (small-signal model)
- linear control (PI)

Advanced techniques:

- non-linear techniques (passivity-based, feedback linearisation) $\rightarrow$ asymptotic stability
- dependence from system parameters

Can we find a non-linear parameter-free controller with guaranteed closed-loop stability?

Outline

- Introduction
- Model of some typical Power & Energy Systems
- Non-linear control theory
  - Dissipative Hamiltonian form
  - Oscillator-based non-linear controller
  - Bounded integral controller (BIC)
- Applications
  - DC/DC boost converter (energy storage, PV)
  - Wind power
  - Parallel operation of inverters
  - Grid-friendly inverters (Synchronverters): CAPS
  - Rectifiers with limited current
- Summary

The University Of Sheffield. CAPS Control and Power Systems

Generalised dissipative Hamiltonian form

DC/DC boost converter:

$$L\dot{i} = -(1-\mu)v + E$$
$$C\dot{v} = (1-\mu)i - \frac{1}{R}v$$

$$\rightarrow M\dot{x} = (J(\mu) - R)x + Gu$$

where $x = \begin{bmatrix} i & v \end{bmatrix}^T$, μ is the control input and $u = E$ is the external uncontrolled input.

$$M = \begin{bmatrix} L & 0 \\ 0 & C \end{bmatrix}, J(\mu) = \begin{bmatrix} 0 & -(1-\mu) \\ (1-\mu) & 0 \end{bmatrix}, R = \begin{bmatrix} 0 & 0 \\ 0 & \frac{1}{R} \end{bmatrix}, G = \begin{bmatrix} 1 & 0 \end{bmatrix}^T$$

The system is passive w.r.t. the external uncontrolled input u independently from $\mu \rightarrow$ Dynamic controller?

Non-linear control design

$$M\dot{x} = (J(x,\mu) - R)x + G(x)u$$

- Passive w.r.t. the constant uncontrolled input u
- Control input μ is a saturated signal in the interval $(-1,1)$ or $[0,1)$

Control task: Regulate state x_i at x_i^{ref}.

Oscillator-based non-linear controller:

$$\mu = z_1 + c$$

$$\begin{bmatrix} \dot{z}_1 \\ \dot{z}_2 \end{bmatrix} = \begin{bmatrix} 0 & -k(x_i - x_i^{ref}) \\ k(x_i - x_i^{ref}) & 0 \end{bmatrix} \begin{bmatrix} z_1 \\ z_2 \end{bmatrix}, \; k > 0$$

- $\mu \in (-1,1)$: $c = 0$, $z_1(0) = -1 + \gamma$, $z_2(0) = 0$
- $\mu \in [0,1)$: $c = \frac{1-\gamma}{2}$, $z_1(0) = -\frac{1-\gamma}{2}$, $z_2(0) = 0$

Non-linear control design

$$M\dot{x} = (J(x,\mu) - R)x + G(x)u$$

- Passive w.r.t. the constant uncontrolled input u
- Control input μ is a saturated signal in the interval $(-1,1)$ or $[0,1)$

Control task: Regulate state x_i at x_i^{ref}.
Oscillator-based non-linear controller:

$$\mu = z_1 + c$$

$$\begin{bmatrix} \dot{z}_1 \\ \dot{z}_2 \end{bmatrix} = \begin{bmatrix} 0 & -k(x_i - x_i^{ref}) \\ k(x_i - x_i^{ref}) & 0 \end{bmatrix} \begin{bmatrix} z_1 \\ z_2 \end{bmatrix}, \; k > 0$$

- $\mu \in (-1,1)$: $c = 0$, $z_1(0) = -1 + \gamma$, $z_2(0) = 0$
- $\mu \in [0,1)$: $c = \frac{1-\gamma}{2}$, $z_1(0) = -\frac{1-\gamma}{2}$, $z_2(0) = 0$

Controller operation

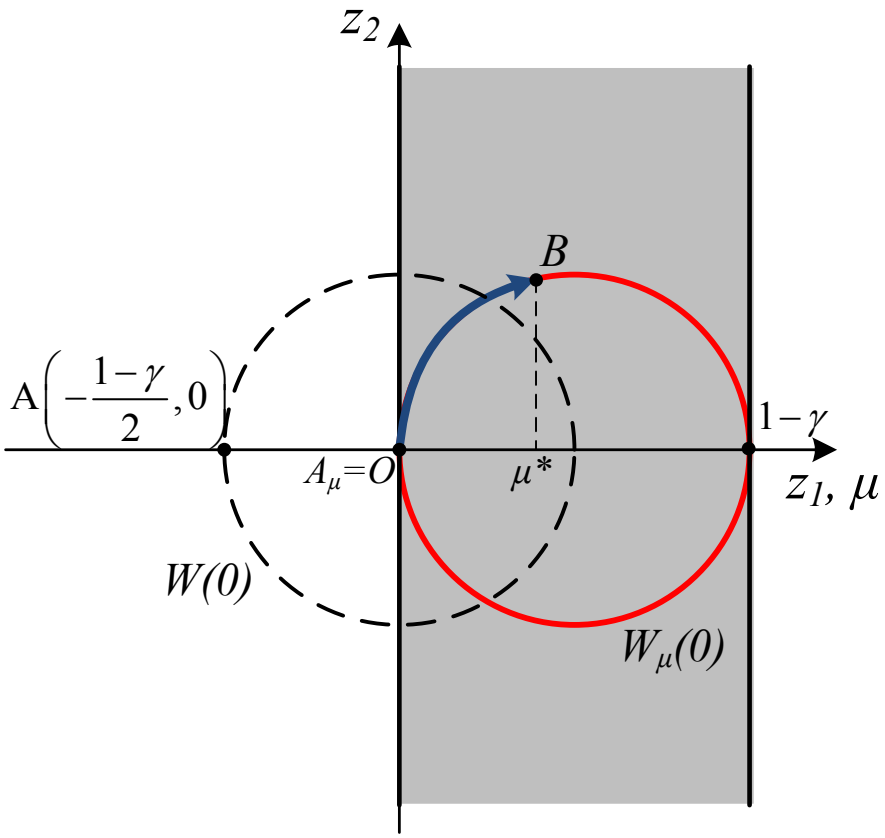

$\rightarrow$ the control input μ is bounded in $[0, 1-\gamma]$!

Closed-loop system stability

Closed-loop system:

$$\tilde{M}\dot{\tilde{x}} = \left(\tilde{J}(\tilde{x}) - \tilde{R}\right)\tilde{x} + \tilde{G}u$$

with $\tilde{x} = \begin{bmatrix} x^T & z_1 & z_2 \end{bmatrix}^T$.

$$\tilde{M} = \begin{bmatrix} M & 0 & 0 \\ 0 & 1 & 0 \\ 0 & 0 & 1 \end{bmatrix}, \tilde{R} = \begin{bmatrix} R & 0 & 0 \\ 0 & 0 & 0 \\ 0 & 0 & 0 \end{bmatrix}, \tilde{G} = \begin{bmatrix} 1 & 0 & 0 \end{bmatrix}^T,$$

$$\tilde{J}(\tilde{x}) = \begin{bmatrix} J & 0 & 0 \\ 0 & 0 & -k(x_i - x_i^{ref}) \\ 0 & k(x_i - x_i^{ref}) & 0 \end{bmatrix}$$

We keep the same passive structure!

Closed-loop system stability

The converter system and the controller system can be handled independently:

- converter system with $\mu \in [0, 1-\gamma]$ is bounded input-bounded output (BIBO) stable.
- controller system is BIBO with zero gain! (bounded output independently from the input)

$\rightarrow$closed-loop system is BIBO w.r.t. the external input u.

Since u is constant, then the closed-loop system solution is bounded in an area where the desired equilibrium exists!

Unique equilibrium, no limit cycles $\rightarrow$ convergence to the equilibrium!

Bounded integral controller (BIC)

Traditional Integral controller for regulating a scalar function $g(x)$ to zero:

$$u(t) = \int_0^t g\left(x(\tau)\right) d\tau$$

which introduces a dynamic controller that can be written as

$$\begin{aligned} u &= w \\ \dot{w} &= g(x) \end{aligned}$$

Bounded Integral Controller (BIC):

$$u = w$$

$$\begin{bmatrix} \dot{w} \\ \dot{w}_q \end{bmatrix} = \begin{bmatrix} -k\left(\frac{w^2}{u_{max}^2} + \frac{(w_q - b)^2}{\varepsilon^2} - 1\right) & g(x)c \\ -\frac{\varepsilon^2}{u_{max}^2} g(x)c & -k\left(\frac{w^2}{u_{max}^2} + \frac{(w_q - b)^2}{\varepsilon^2} - 1\right) \end{bmatrix} \begin{bmatrix} w \\ w_q \end{bmatrix}$$

The University Of Sheffield. CAPS Control and Power Systems

$b \geq 0,\ k,\ u_{max},\ \varepsilon,\ c > 0.$

Stability of ISpS plant systems

Consider a non-linear system: $\dot{x} = f(t, x, u, u_1)$

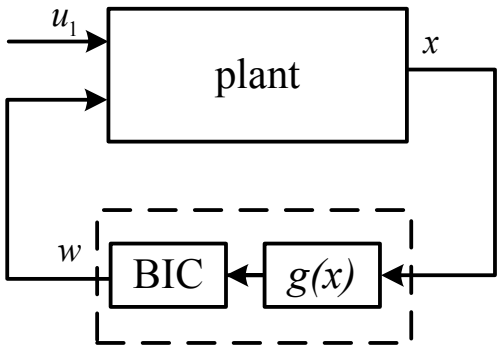

Proposition

The feedback interconnection of plant system with the proposed BIC is ISpS, when the plant system is ISpS.

ISpS: Input-to-state practical stability
The BIC introduces a zero-gain property.

BIC with given bound $u \in [-u_{max}, u_{max}]$

- Normal conditions: $b = 0,\ \varepsilon = 1,\ k > 0,\ c = \frac{w_q u_{max}^2}{u_{max}^2 - (u^*)^2}$ where u^* is the nominal value of u.
- Abnormal conditions: $b = c = 1,\ k > 0$ (sufficiently large), $\varepsilon > 0$ (sufficiently small)

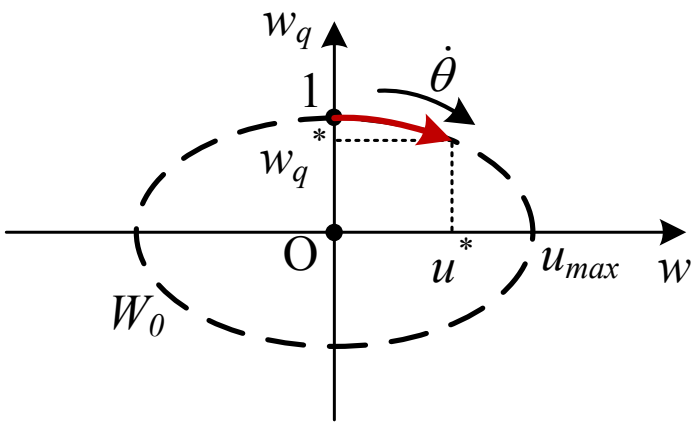

Normal conditions

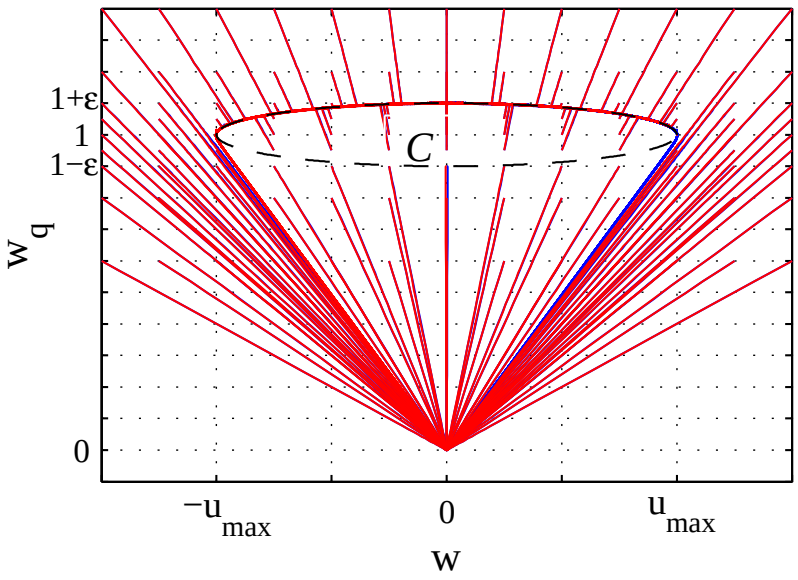

Abnormal conditions

Integrator replacement

Bounded integral control (BIC):

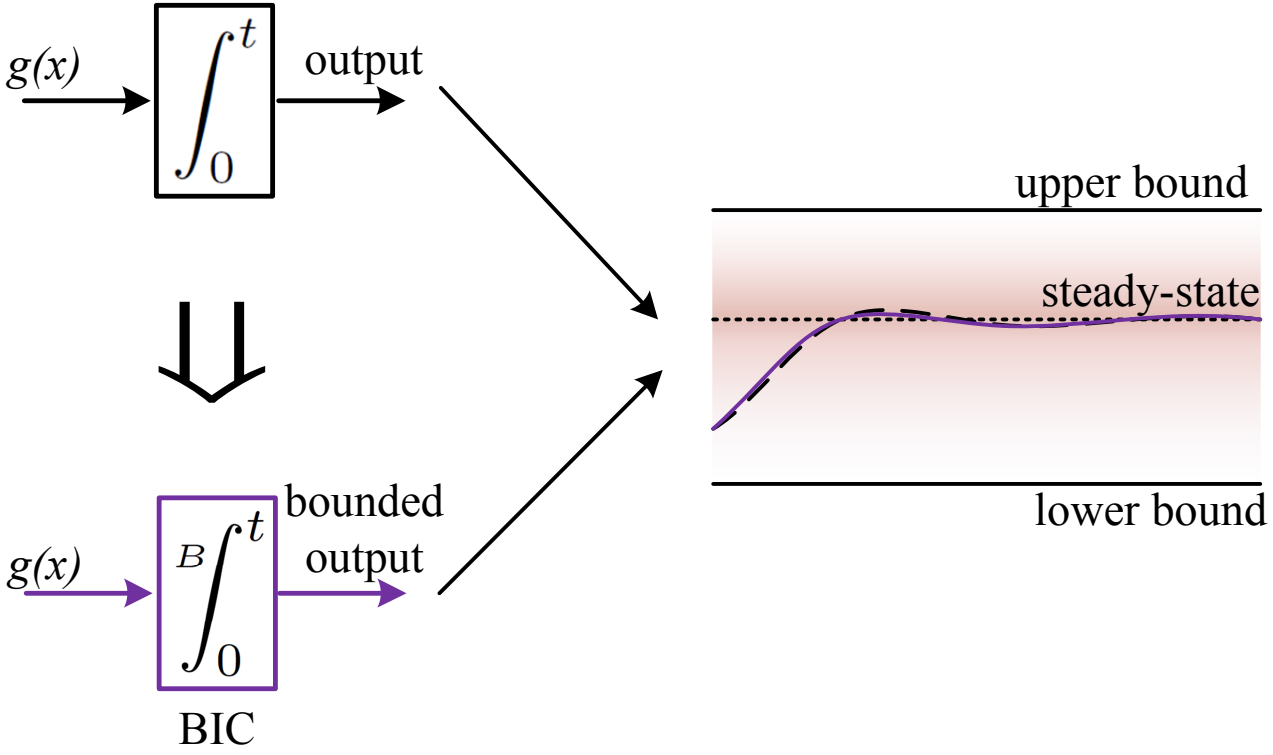

- normal conditions: slow down the integration near the bounds
- abnormal conditions: fail-safe operation

Outline

- Introduction
- Model of some typical Power & Energy Systems
- Non-linear control theory
  - Dissipative Hamiltonian form
  - Oscillator-based non-linear controller
  - Bounded integral controller (BIC)
- Applications
  - DC/DC boost converter (energy storage, PV)
  - Wind power
  - Parallel operation of inverters
  - Grid-friendly inverters (Synchronverters): CAPS
  - Rectifiers with limited current
- Summary

The University Of Sheffield. CAPS Control and Power Systems

DC/DC boost converter control

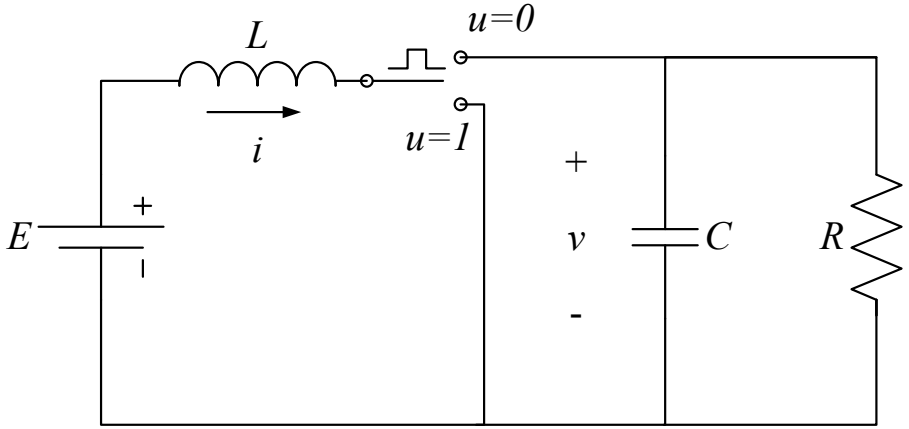

Control task: Regulate the output voltage v at v_{ref}.
Using the oscillator-based non-linear controller:

$$\mu = z_1 + \frac{1-\gamma}{2}$$

$$\begin{bmatrix} \dot{z}_1 \\ \dot{z}_2 \end{bmatrix} = \begin{bmatrix} 0 & -k(v - v_{ref}) \\ k(v - v_{ref}) & 0 \end{bmatrix} \begin{bmatrix} z_1 \\ z_2 \end{bmatrix}$$

- γ small positive constant
- $k > 0$
- initial conditions $z_1(0) = -\frac{1-\gamma}{2}$, $z_2(0) = 0$

Results

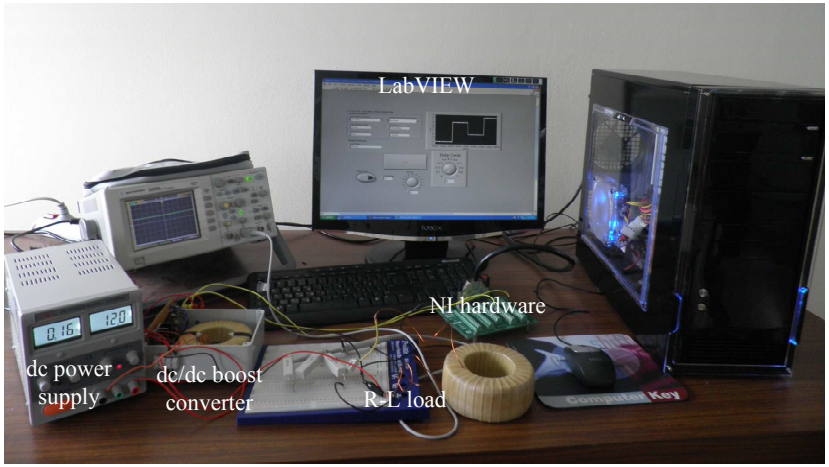
LabVIEW
NI hardware
dc power supply
dc/dc boost converter
R-L load

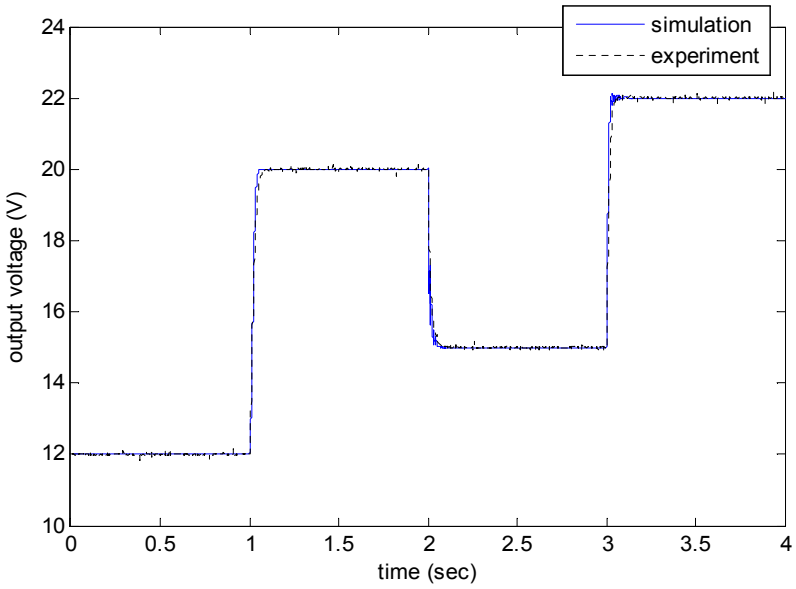
simulation
experiment
output voltage (V)
time (sec)
24
22
20
18
16
14
12
10
0
0.5
1
1.5
2
2.5
3
3.5
4

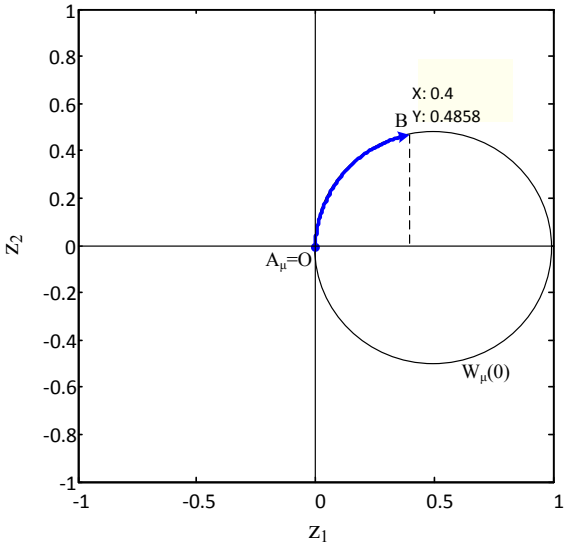
X: 0.4
Y: 0.4858
B
A_μ=O
$W_\mu(0)$
z_1
z_2
1
0.8
0.6
0.4
0.2
0
-0.2
-0.4
-0.6
-0.8
-1
-1
-0.5
0
0.5
1

Wind Power Application

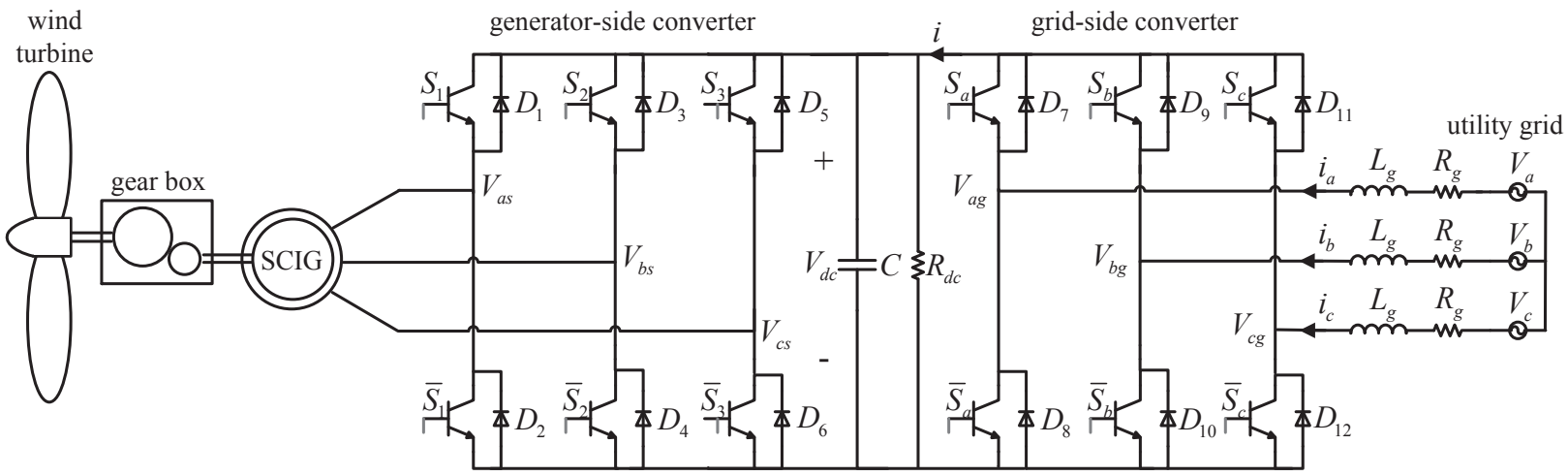

- Generator-side converter control:
  - Maximum Power Point Tracking (MPPT)
  - Field-oriented control (FOC) of SCIG
- Grid-side converter control:
  - dc-link bus voltage regulation
  - unity power factor ($Q_g = 0$)

Traditional control techniques: PI and cascaded PI control (complete system stability has not been investigated yet)

Wind Power Application

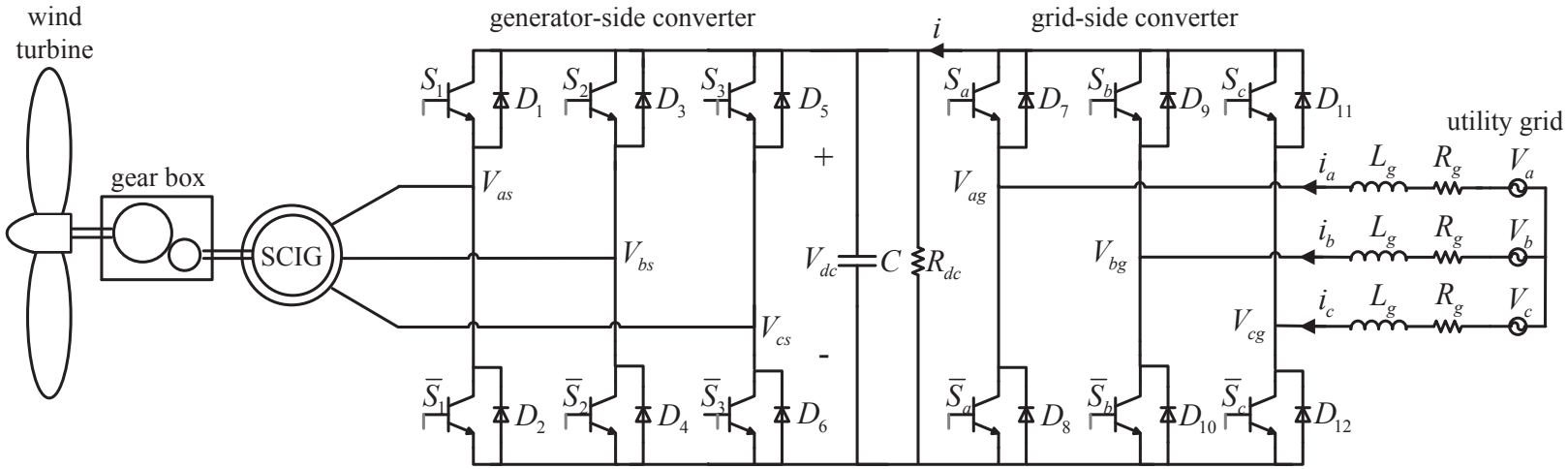

- Generator-side converter control:
  - Maximum Power Point Tracking (MPPT)
  - Field-oriented control (FOC) of SCIG
- Grid-side converter control:
  - dc-link bus voltage regulation
  - unity power factor ($Q_g = 0$)

Traditional control techniques: PI and cascaded PI control (complete system stability has not been investigated yet)

Wind power system modelling

Complete wind power system modelling: SCIG dynamics + ac/dc/ac converter dynamics

$$M\dot{x} = \left(J\left(x, m_{ds}, m_{qs}, m_{dg}, m_{qg}\right) - R\right)x + u$$

where $x = \begin{bmatrix} i_{ds} & i_{qs} & \lambda_{dr} & \lambda_{qr} & \omega_r & i_d & i_q & V_{dc} \end{bmatrix}^T$ is the state vector, $u = \begin{bmatrix} 0 & V_m & 0 & 0 & -\frac{2}{3}T_m & 0 & 0 & 0 \end{bmatrix}^T$ is the uncontrolled external input vector.

- Generator-side converter control inputs: m_{ds}, m_{qs}
- Grid-side converter control inputs: m_{dg}, m_{qg}

Wind power system modelling

$$M = diag\left(\sigma, \sigma, \frac{1}{L_r}, \frac{1}{L_r}, \frac{2}{3}J_m, L_g, L_g, \frac{2}{3}C\right),$$

$$R = \begin{bmatrix} \frac{R_r L_m^2}{L_r^2} + R_s & 0 & -\frac{R_r L_m}{L_r^2} & 0 & 0 & 0 & 0 & 0 \\ 0 & \frac{R_r L_m^2}{L_r^2} + R_s & 0 & -\frac{R_r L_m}{L_r^2} & 0 & 0 & 0 & 0 \\ -\frac{R_r L_m}{L_r^2} & 0 & \frac{R_r}{L_r^2} & 0 & 0 & 0 & 0 & 0 \\ 0 & -\frac{R_r L_m}{L_r^2} & 0 & \frac{R_r}{L_r^2} & 0 & 0 & 0 & 0 \\ 0 & 0 & 0 & 0 & \frac{2}{3}b & 0 & 0 & 0 \\ 0 & 0 & 0 & 0 & 0 & R_g & 0 & 0 \\ 0 & 0 & 0 & 0 & 0 & 0 & R_g & 0 \\ 0 & 0 & 0 & 0 & 0 & 0 & 0 & \frac{3}{2R_{dc}} \end{bmatrix},$$

$$J = \begin{bmatrix} 0 & \sigma\omega_e & 0 & 0 & \frac{L_m}{L_r}p\lambda_{qr} & 0 & 0 & \frac{1}{2}m_{ds} \\ -\sigma\omega_e & 0 & 0 & 0 & -\frac{L_m}{L_r}p\lambda_{dr} & 0 & 0 & \frac{1}{2}m_{qs} \\ 0 & 0 & 0 & \frac{\omega_e - p\omega_r}{L_r} & 0 & 0 & 0 & 0 \\ 0 & 0 & -\frac{\omega_e - p\omega_r}{L_r} & 0 & 0 & 0 & 0 & 0 \\ -\frac{L_m}{L_r}p\lambda_{qr} & \frac{L_m}{L_r}p\lambda_{dr} & 0 & 0 & 0 & 0 & 0 & 0 \\ 0 & 0 & 0 & 0 & 0 & 0 & \omega_s L_g & -\frac{1}{2}m_{dg} \\ 0 & 0 & 0 & 0 & 0 & -\omega_s L_g & 0 & -\frac{1}{2}m_{qg} \\ -\frac{1}{2}m_{ds} & -\frac{1}{2}m_{qs} & 0 & 0 & 0 & \frac{1}{2}m_{dg} & \frac{1}{2}m_{qg} & 0 \end{bmatrix}$$

Wind power system control

How can we control the complete wind power system to achieve the desired operation and guarantee stability?

$\rightarrow$ use the same oscillator-based non-linear controller for the duty-ratio inputs as in the case of the dc/dc boost converter

The limits of the duty-ratio signals are not independent:

$$m_{ds}^2 + m_{qs}^2 \leq 1, \; m_{dg}^2 + m_{qg}^2 \leq 1$$

Wind power system control

How can we control the complete wind power system to achieve the desired operation and guarantee stability?

$\rightarrow$ use the same oscillator-based non-linear controller for the duty-ratio inputs as in the case of the dc/dc boost converter

The limits of the duty-ratio signals are not independent:

$$m_{ds}^2 + m_{qs}^2 \leq 1, \; m_{dg}^2 + m_{qg}^2 \leq 1$$

Wind power system control

How can we control the complete wind power system to achieve the desired operation and guarantee stability?

$\rightarrow$ use the same oscillator-based non-linear controller for the duty-ratio inputs as in the case of the dc/dc boost converter

The limits of the duty-ratio signals are not independent:

$$m_{ds}^2 + m_{qs}^2 \leq 1, \; m_{dg}^2 + m_{qg}^2 \leq 1$$

Wind power system control

Generator-side converter control:

- MPPT: regulate rotor speed ω_r to ω_r^{ref}
- FOC: regulate $d-$axis stator current i_{ds} to i_{ds}^{ref}

$$
\begin{aligned}
m_{ds} &= z_1 \\
m_{qs} &= z_2
\end{aligned}
$$

$$
\begin{bmatrix} \dot{z}_1 \\ \dot{z}_2 \\ \dot{z}_3 \end{bmatrix} = \begin{bmatrix} 0 & 0 & -k_1\left(i_{ds} - i_{ds}^{ref}\right) \\ 0 & 0 & -k_2\left(\omega_r - \omega_r^{ref}\right) \\ k_1\left(i_{ds} - i_{ds}^{ref}\right) & k_2\left(\omega_r - \omega_r^{ref}\right) & -c_1\left(z_1^2 + z_2^2 + z_3^2 - 1\right) \end{bmatrix} \begin{bmatrix} z_1 \\ z_2 \\ z_3 \end{bmatrix}
$$

k_1, k_2 are non-negative constants

Wind power system control

The 3 controller states are attracted and exclusively move on the surface of the sphere $C_{r1} = \left\{ z_1, z_2, z_3 : z_1^2 + z_2^2 + z_3^2 = 1 \right\}$.

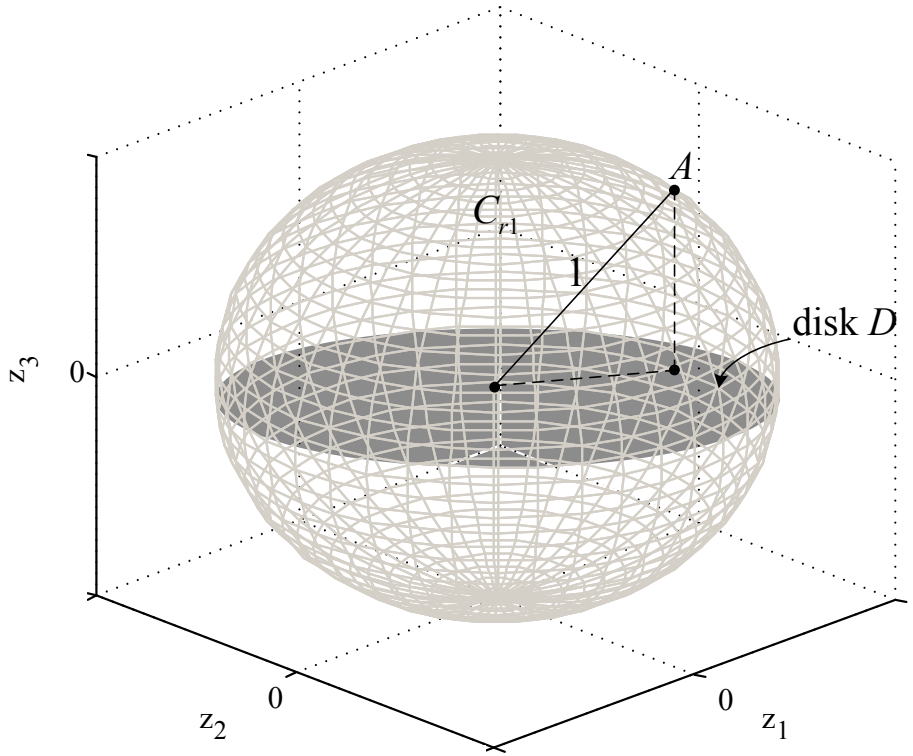

The duty-ratio inputs $m_{ds} = z_1$ and $m_{qs} = z_2$ take values inside the disk D, i.e. $m_{ds}^2 + m_{qs}^2 \leq 1$.

Real-time simulation results

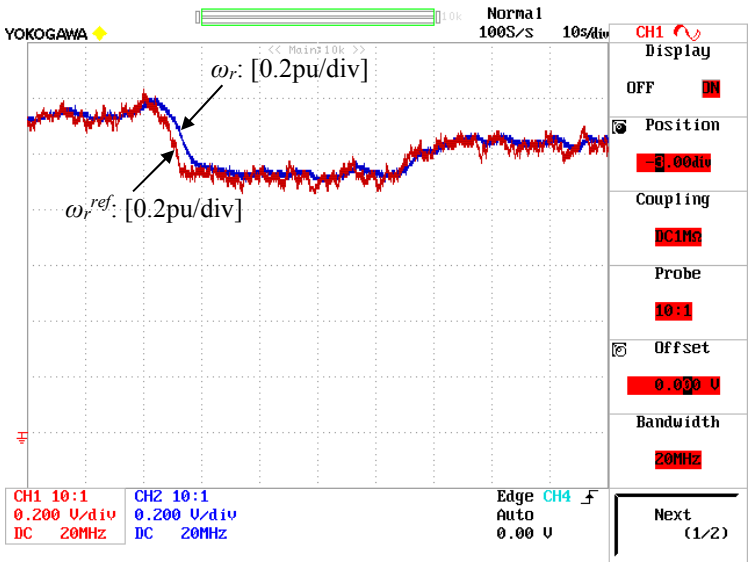

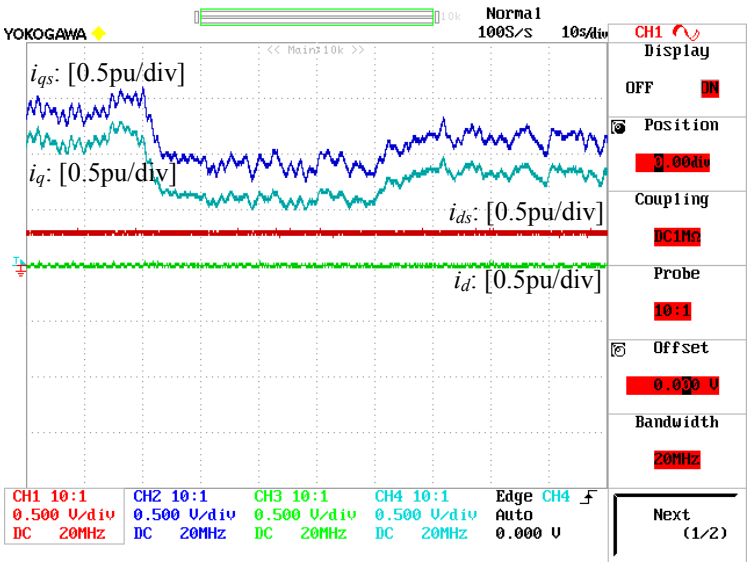

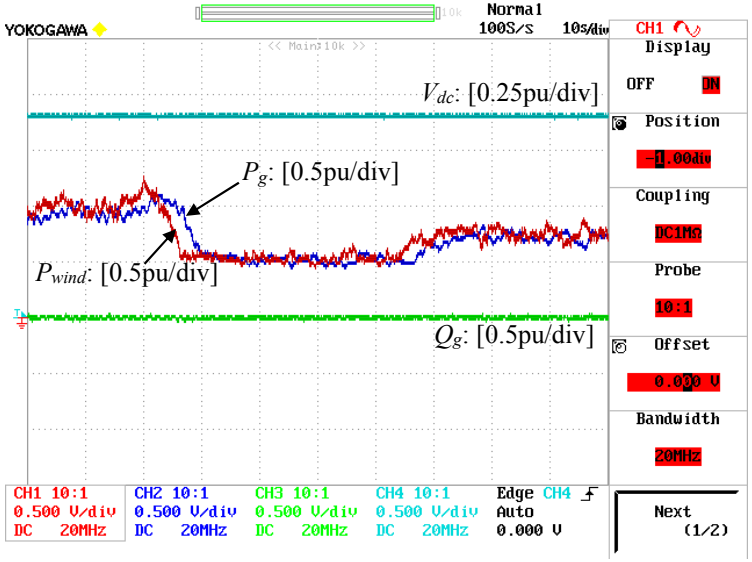

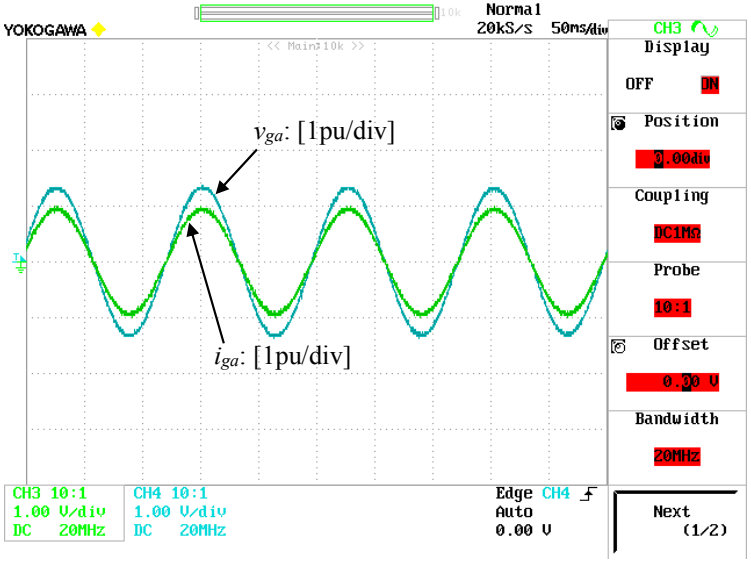

Power network - microgrid

A power network has a large number of buses:

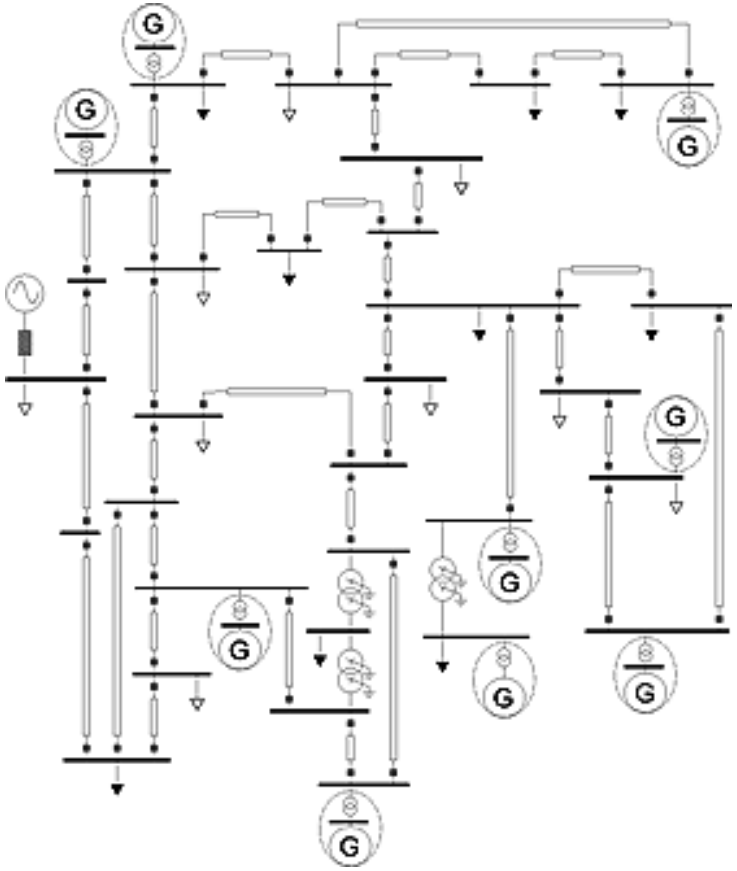

The inverters can be assumed as voltage sources to simplify the analysis.

Power network - microgrid

Is non-linear control theory important in this case?

- Basic control structure: Droop control (non-linear structure of P and Q)
- Accurate load modelling (linear, non-linear)

$\rightarrow$ Linearisation and local stability is not enough

Power network - microgrid

Is non-linear control theory important in this case?

- Basic control structure: Droop control (non-linear structure of P and Q)
- Accurate load modelling (linear, non-linear)

$\rightarrow$ Linearisation and local stability is not enough

Parallel operation of inverters

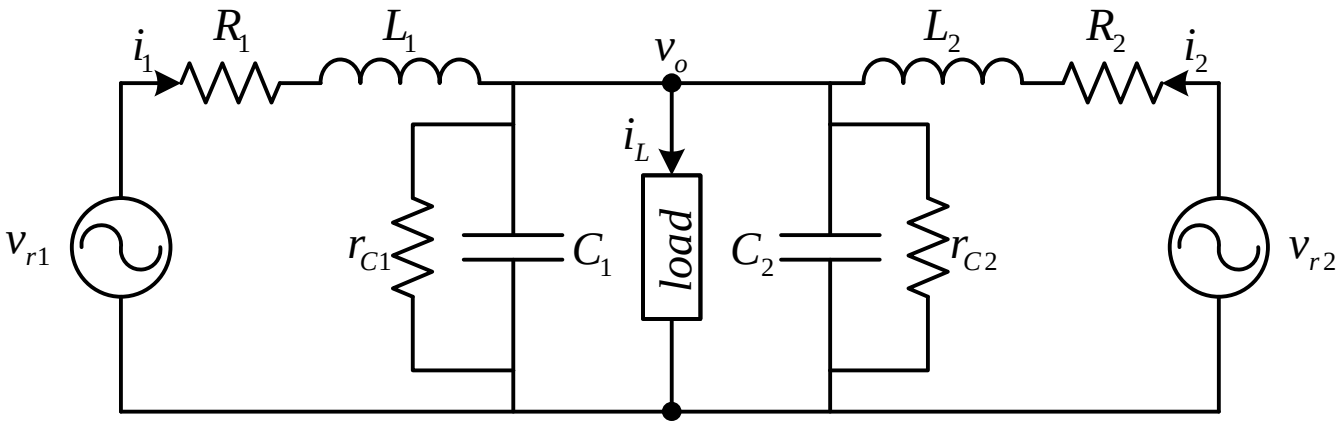

Proportional load sharing:

- Conventional droop control ($i \in \{1,2\}$):

$$E_i = E^* - n_i Q_i$$

$$\dot{\theta}_i = \omega^* - m_i P_i$$

$$\implies v_{ri} = \sqrt{2} E_i \sin(\theta_i)$$

cannot achieve accurate load sharing when inverters introduce different output impedances.

Robust Droop Controller

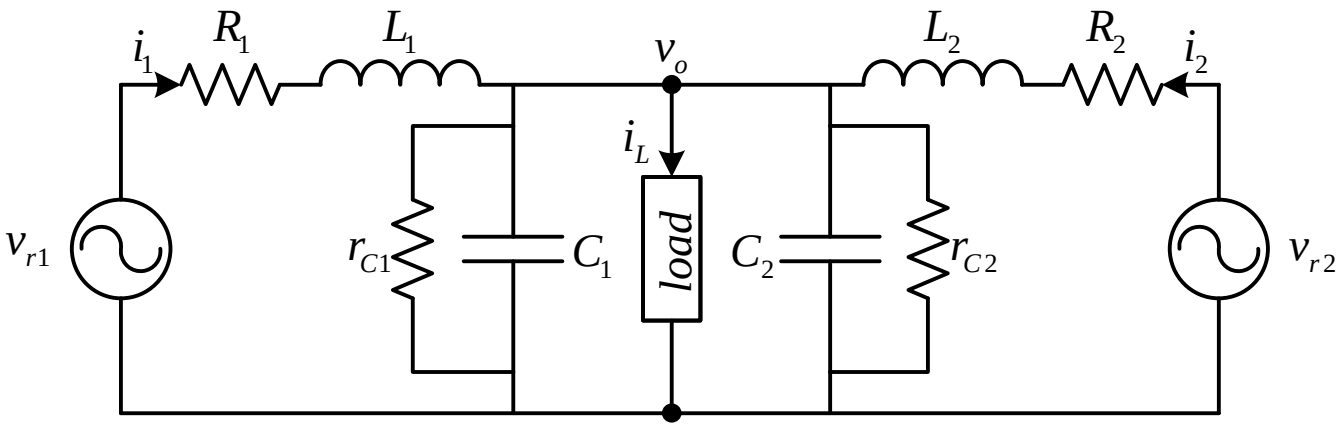

Robust Droop Controller (RDC):

$$\dot{E}_i = K_e(E^* - V_o) - n_i Q_i$$

$$\dot{\theta}_i = \omega^* - m_i P_i$$

- accurate load sharing
- output voltage regulation near E^*

Linear/non-linear plant + non-linear controller
$\Longrightarrow$ Is the closed-loop system stable?

Robust Droop Controller

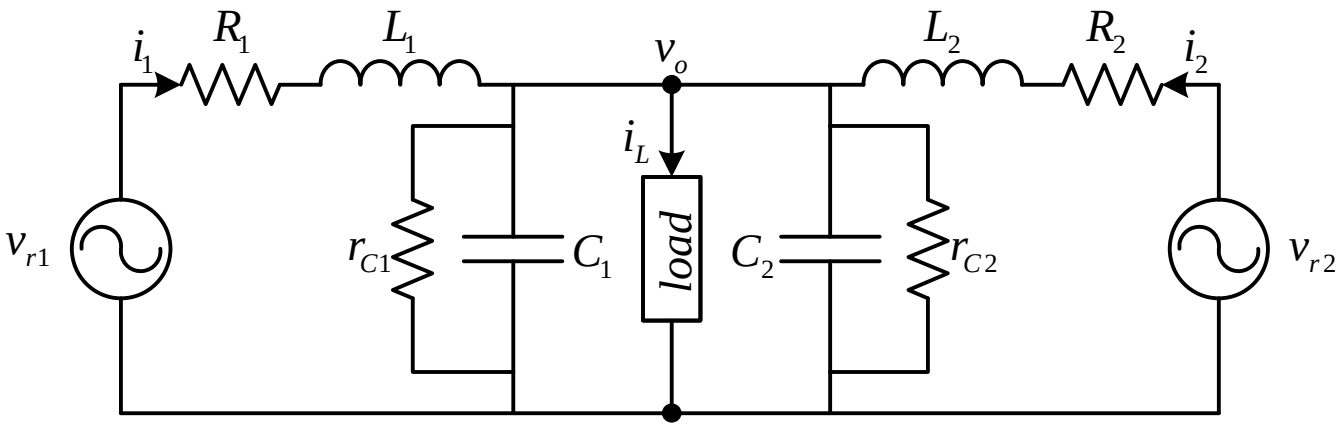

Robust Droop Controller (RDC):

$$\dot{E}_i = K_e(E^* - V_o) - n_i Q_i$$

$$\dot{\theta}_i = \omega^* - m_i P_i$$

- accurate load sharing
- output voltage regulation near E^*

Linear/non-linear plant + non-linear controller
$\Longrightarrow$ Is the closed-loop system stable?

Bounded droop controller (BDC)

Bounded droop controller (BDC):

- RMS dynamics:

$$\dot{E}_i = \left(K_e\left(E^* - V_o\right) - n_i Q_i\right) c E_{qi}$$
$$\dot{E}_{qi} = -\left(K_e\left(E^* - V_o\right) - n_i Q_i\right) c E_i$$

  where c is a positive constant.

- frequency dynamics:

$$\dot{z}_i = \left(\omega^* - m_i P_i\right) z_{qi},$$
$$\dot{z}_{qi} = -\left(\omega^* - m_i P_i\right) z_i.$$

$$\Longrightarrow \quad v_{ri} = \sqrt{2} E_i z_i$$

BDC operation

RMS voltage dynamics

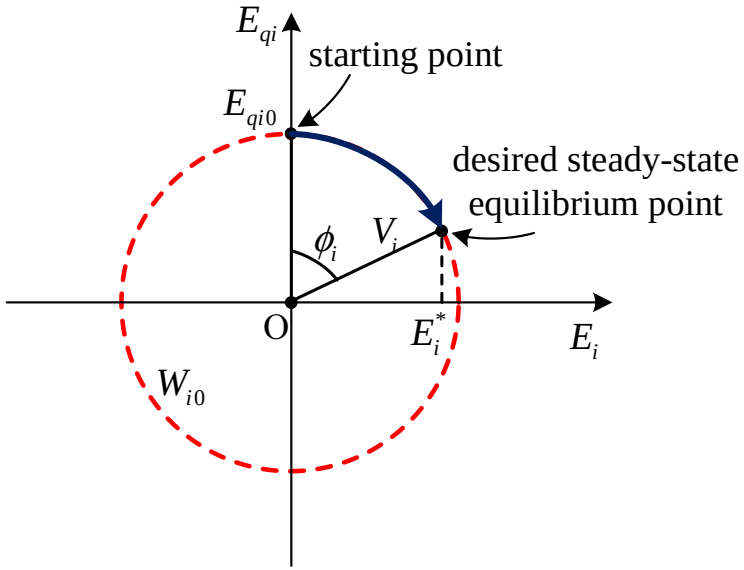

frequency dynamics

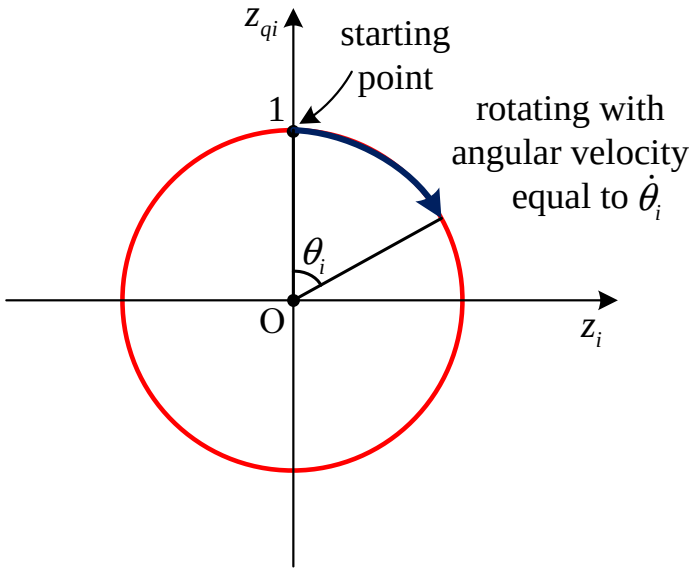

$$\dot{\phi}_i = \left(K_e\left(E^* - V_o\right) - n_i Q_i\right) c$$

$$\dot{\theta}_i = \omega^* - m_i P_i$$

$$E_i,\, E_{qi} \in [-V_i, V_i]$$

$$z_i,\, z_{qi} \in [-1, 1]$$

Therefore $v_{ri} = \sqrt{2} E_i z_i \in \left[-\sqrt{2} V_i, \sqrt{2} V_i\right] \Rightarrow$ BDC

Real-time simulations (non-linear load)

BDC

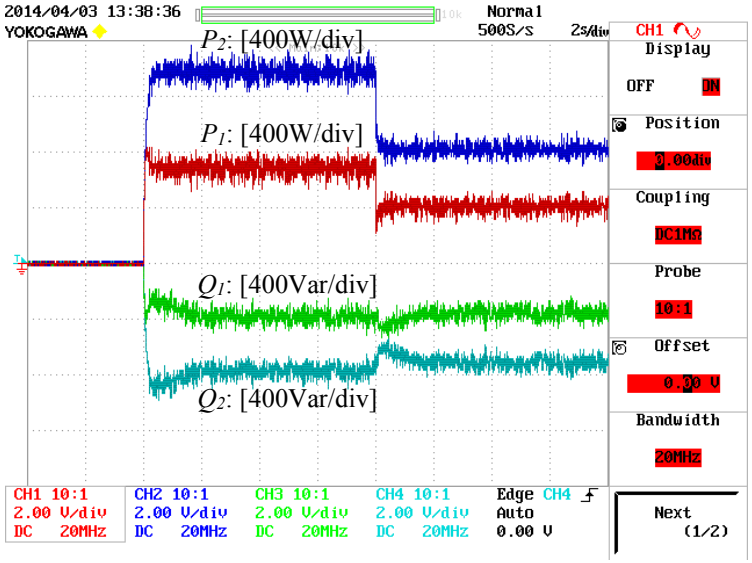

RDC

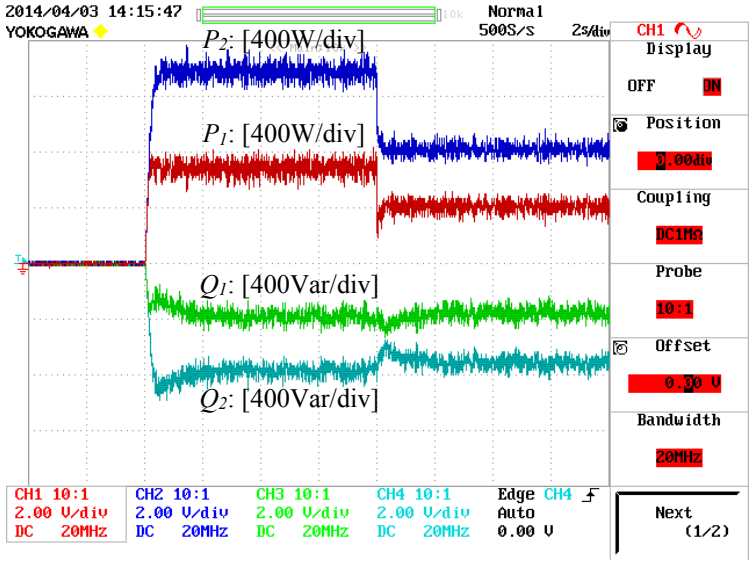

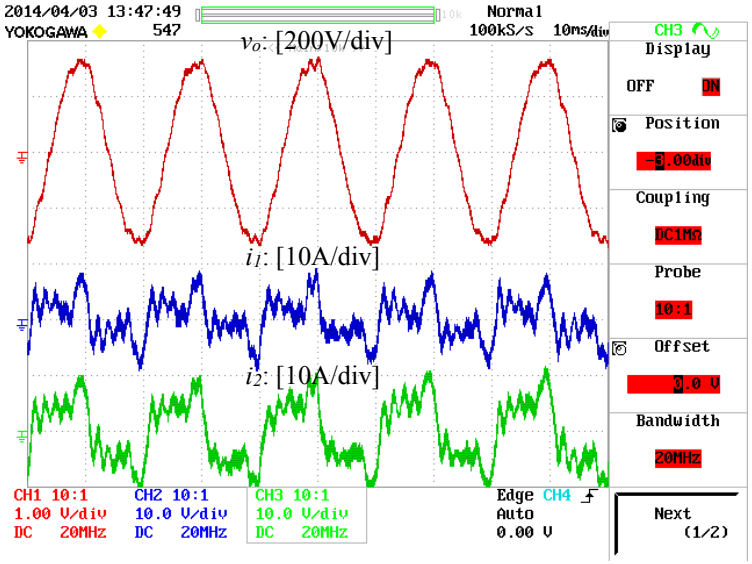

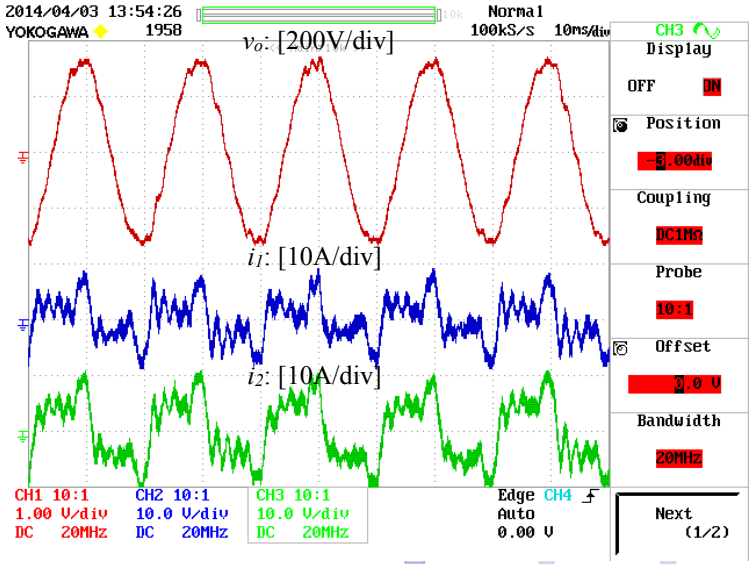

The University Of Sheffield.
CAPS
Control and Power Systems

Real-time simulations (non-linear load)

BDC

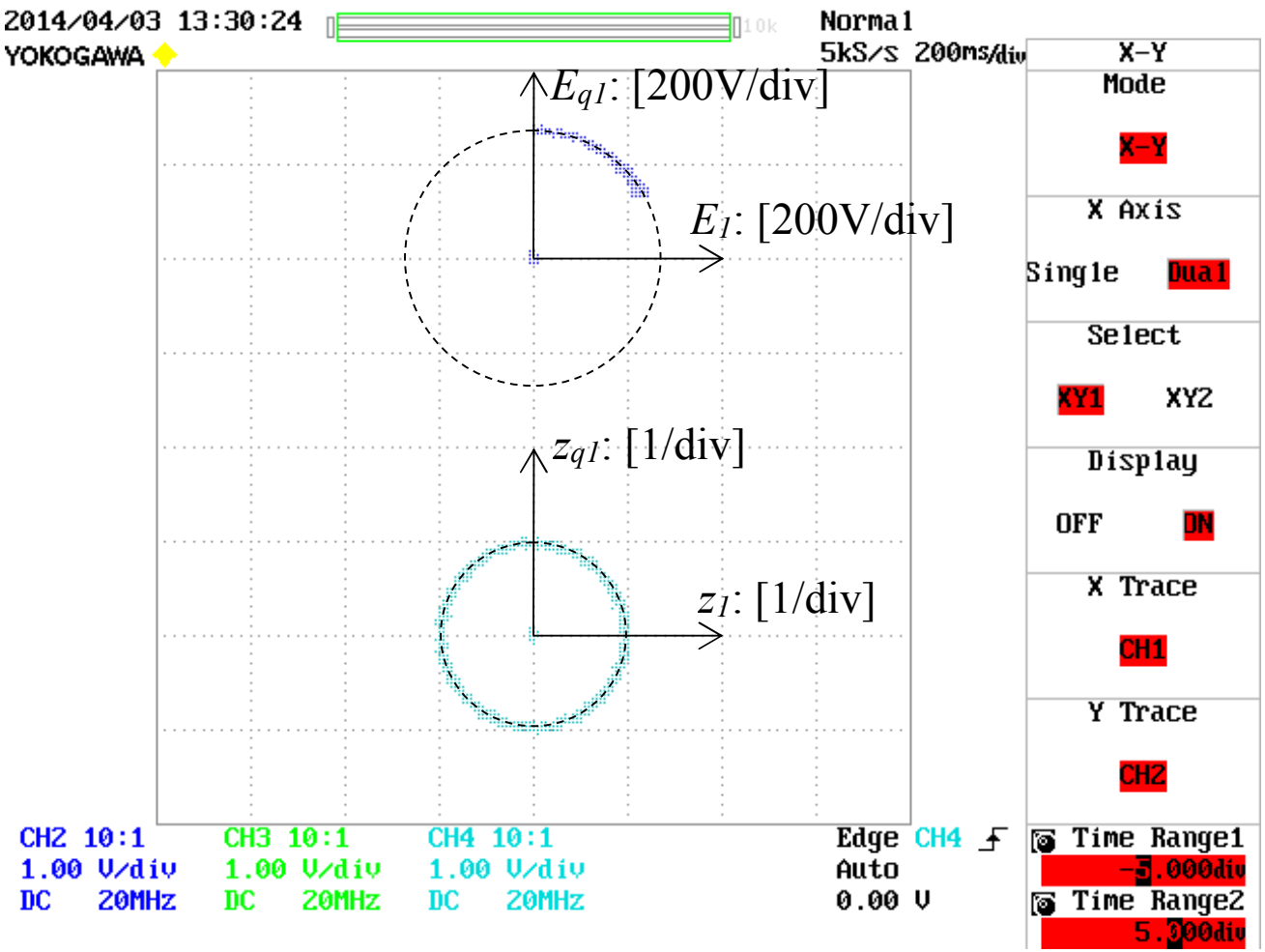

Grid-friendly inverters (Synchronverters)

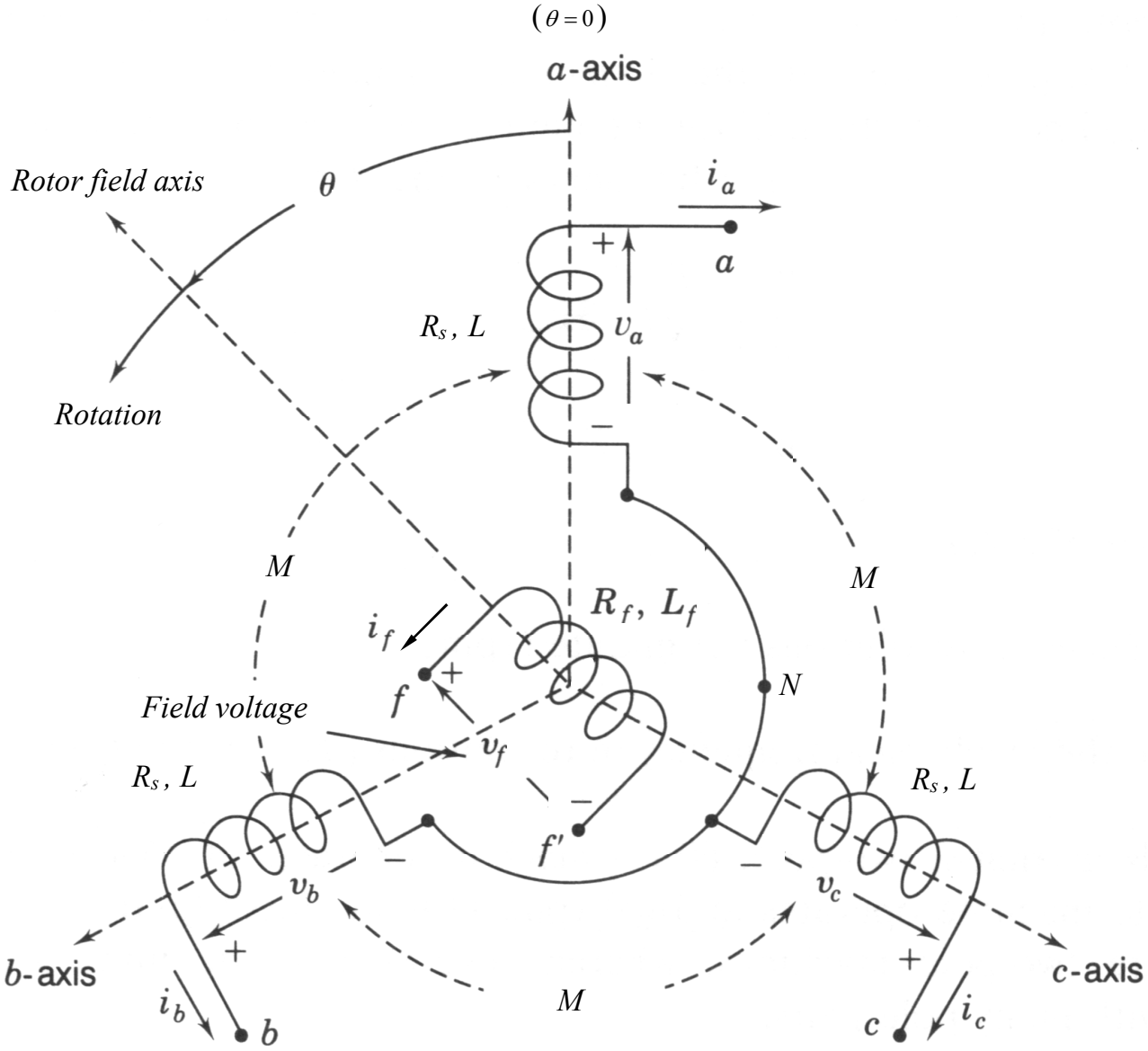

Synchronverter parts

Power Part

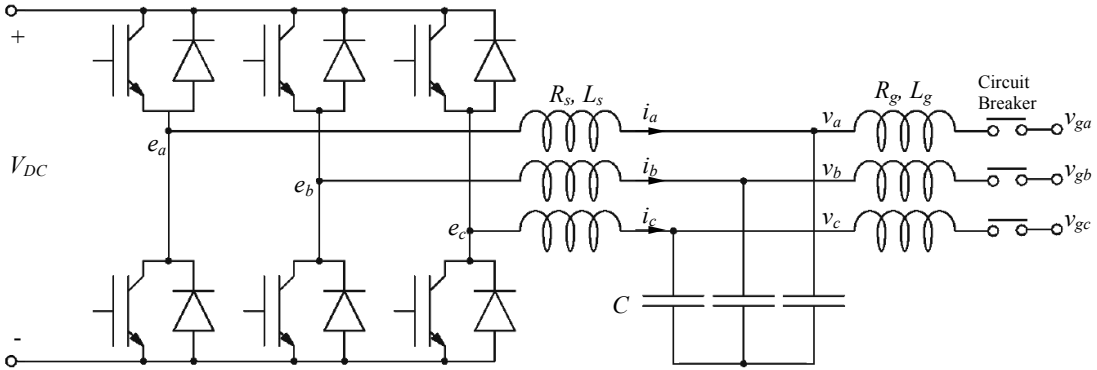

Control Part

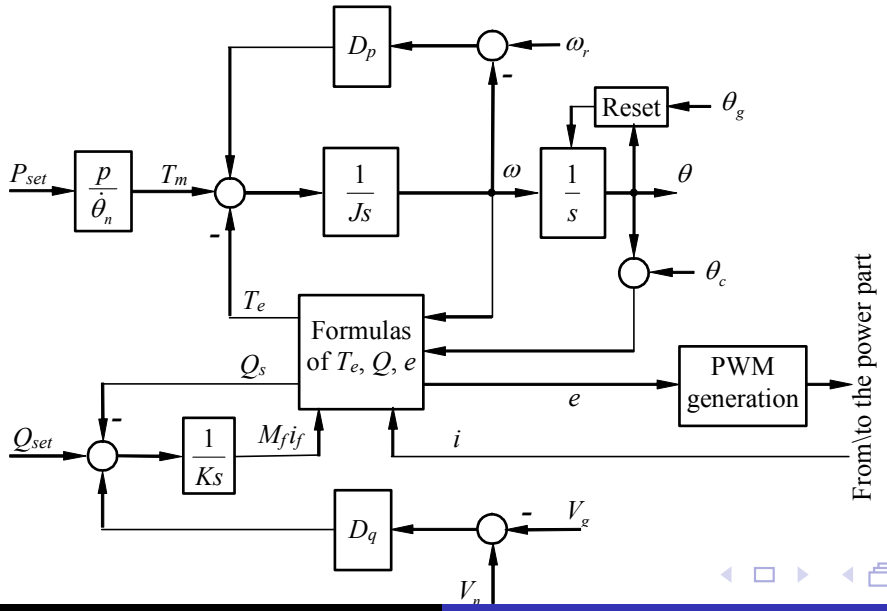

Synchronverter control and stability

Stability is still not proven!

Can we guarantee system stability while maintaining the synchronverter original operation?

Solution: Use BIC for the integrators of the frequency ω and the field-excitation current i_f loops.

- Guarantee specific bounds for the synchronverter voltage and frequency according the its technical limits:

  $E \in [E_{min}, E_{max}]$ and $\omega \in [\omega_n - \Delta\omega_{max}, \omega_n + \Delta\omega_{max}]$

- Guarantee convergence to the desired unique equilibrium

Synchronverter control and stability

Stability is still not proven!

Can we guarantee system stability while maintaining the synchronverter original operation?

Solution: Use BIC for the integrators of the frequency ω and the field-excitation current i_f loops.

- Guarantee specific bounds for the synchronverter voltage and frequency according the its technical limits:

  $$E \in [E_{min}, E_{max}] \text{ and } \omega \in [\omega_n - \Delta\omega_{max}, \omega_n + \Delta\omega_{max}]$$

- Guarantee convergence to the desired unique equilibrium

Real-time simulation results

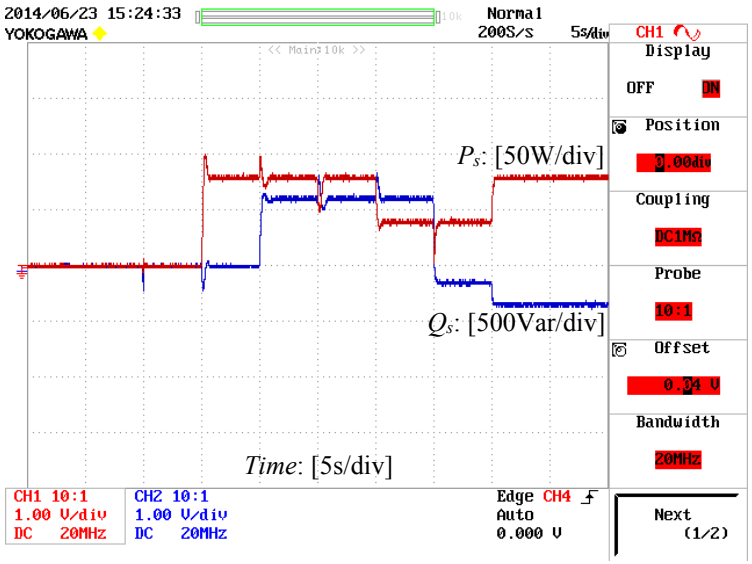

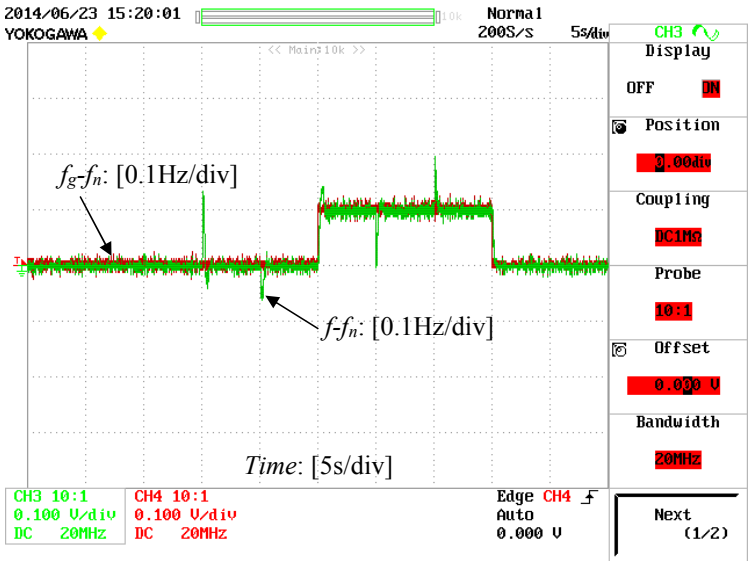

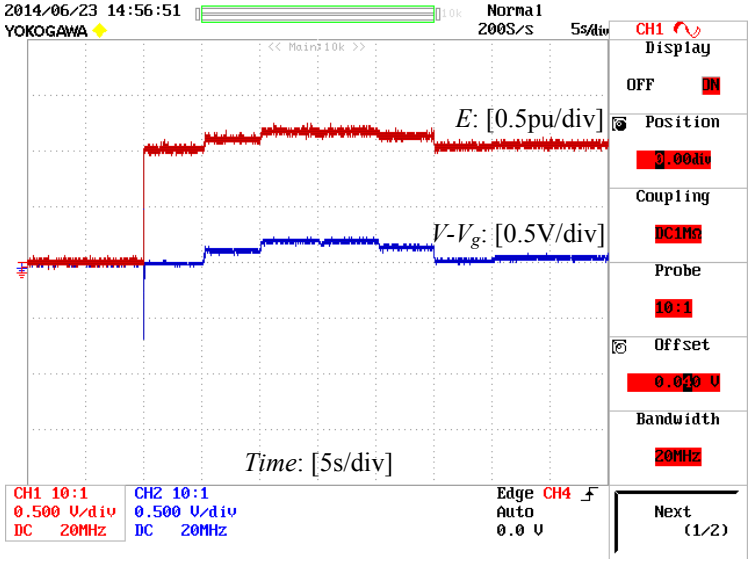

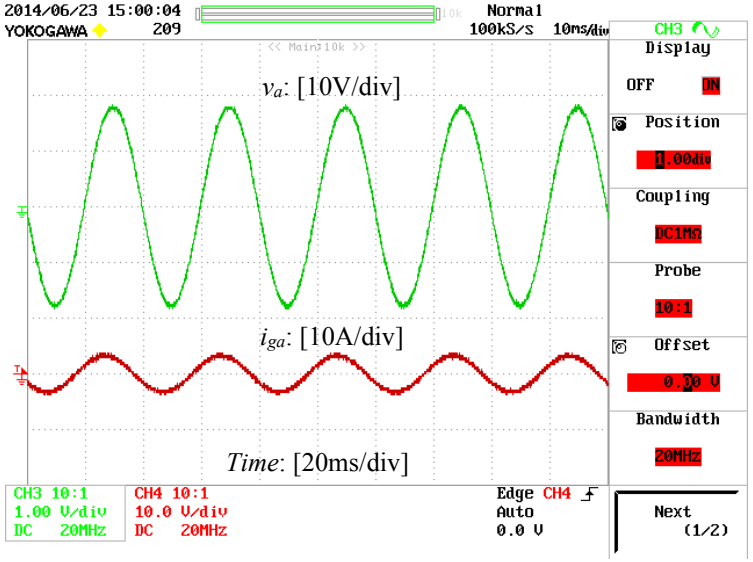

Completely Autonomous Power Systems (CAPS)

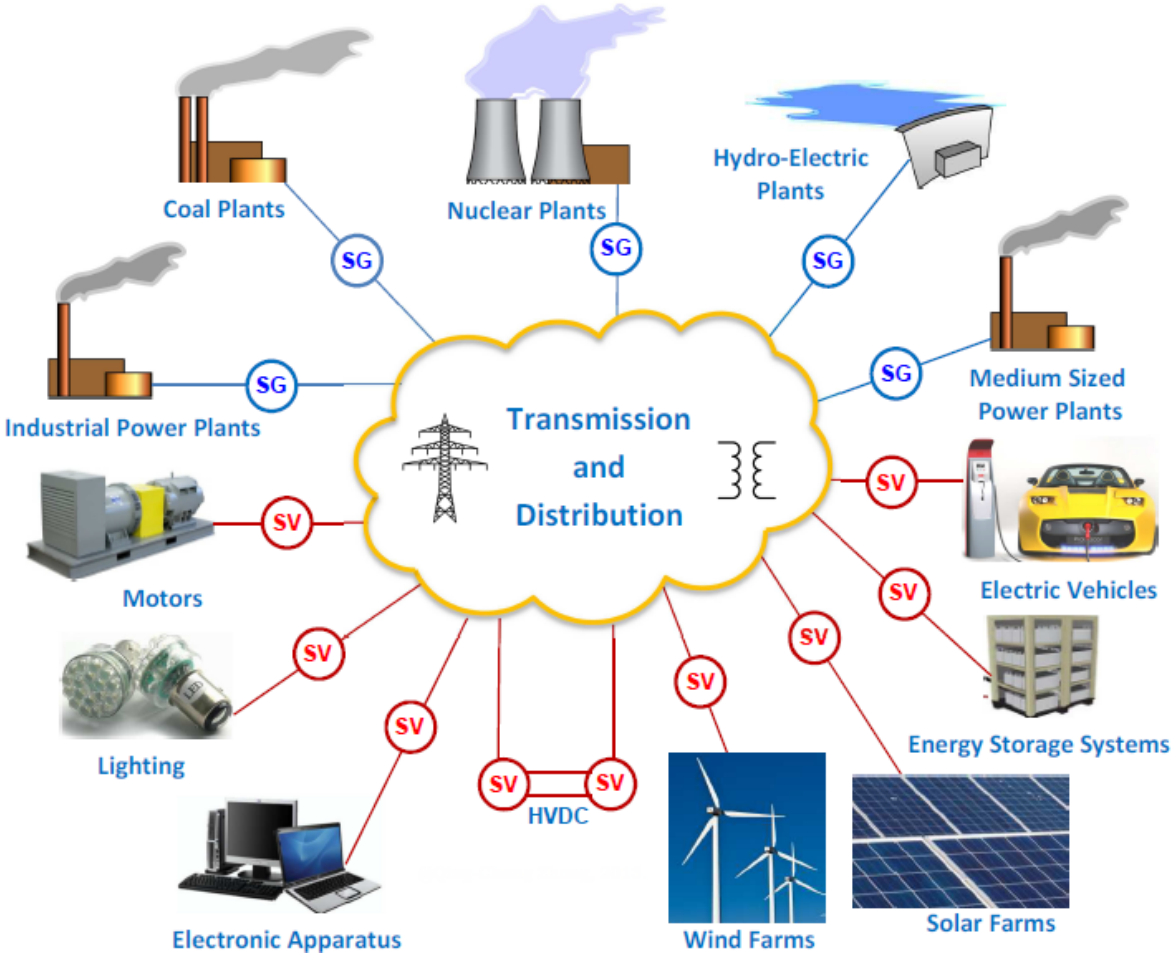

Big step for guaranteeing stability of CAPS!

Closed-loop system stability

A fundamental problem in control systems is that closed-loop system stability is not guaranteed even if the plant is BIBO.

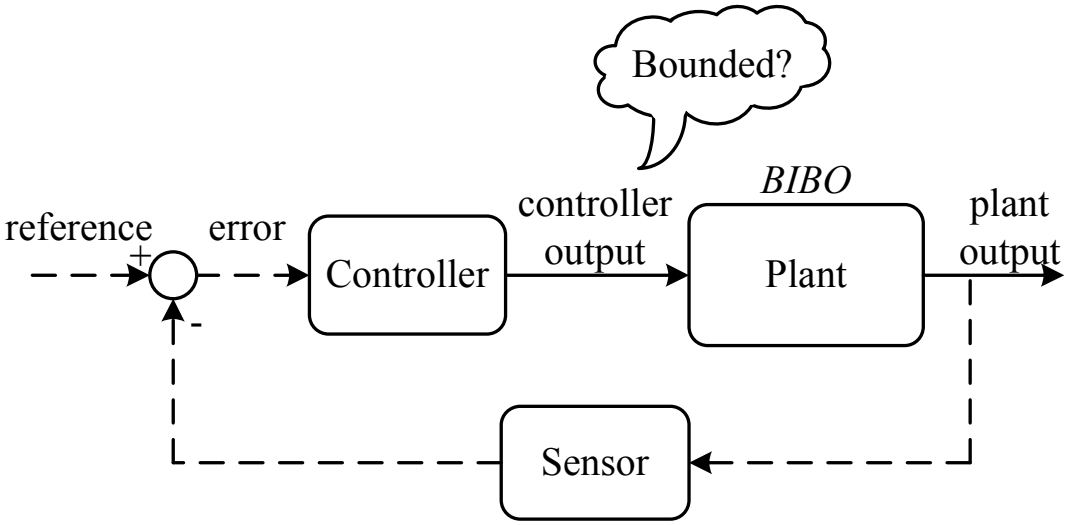

The BIC can guarantee a bounded input for the plant independently from the error signal (zero-gain property).

However, a given bound for a state of the plant (e.g. current) is not guaranteed.

Can we design such a controller?

Closed-loop system stability

A fundamental problem in control systems is that closed-loop system stability is not guaranteed even if the plant is BIBO.

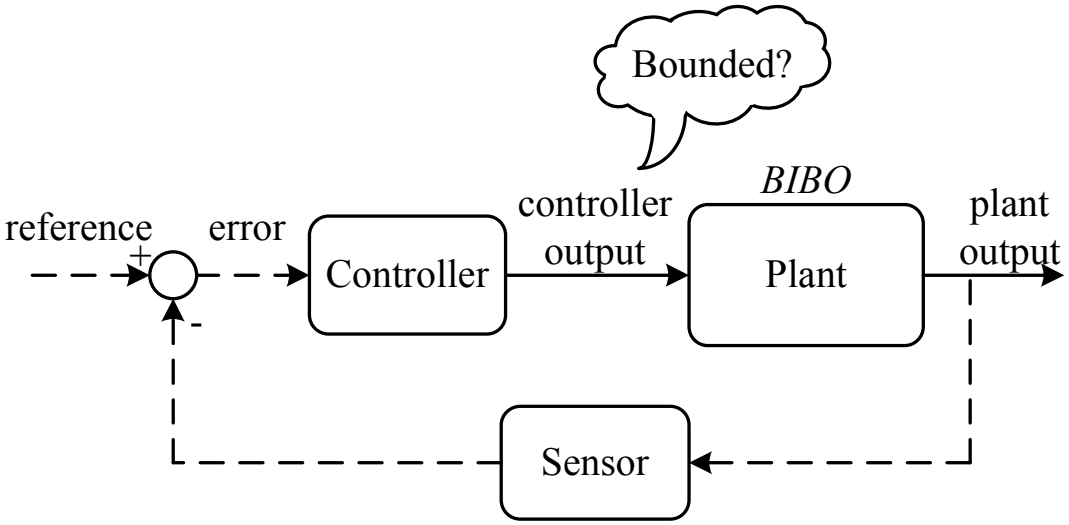

The BIC can guarantee a bounded input for the plant independently from the error signal (zero-gain property). However, a given bound for a state of the plant (e.g. current) is not guaranteed.

Can we design such a controller?

Closed-loop system stability

A fundamental problem in control systems is that closed-loop system stability is not guaranteed even if the plant is BIBO.

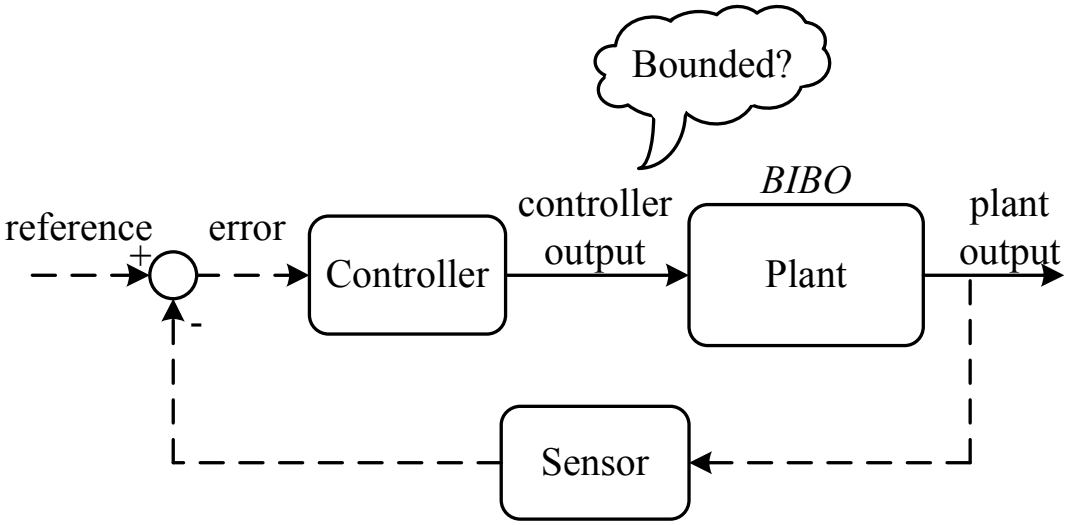

The BIC can guarantee a bounded input for the plant independently from the error signal (zero-gain property). However, a given bound for a state of the plant (e.g. current) is not guaranteed.

Can we design such a controller?

Single-phase rectifier with limited current

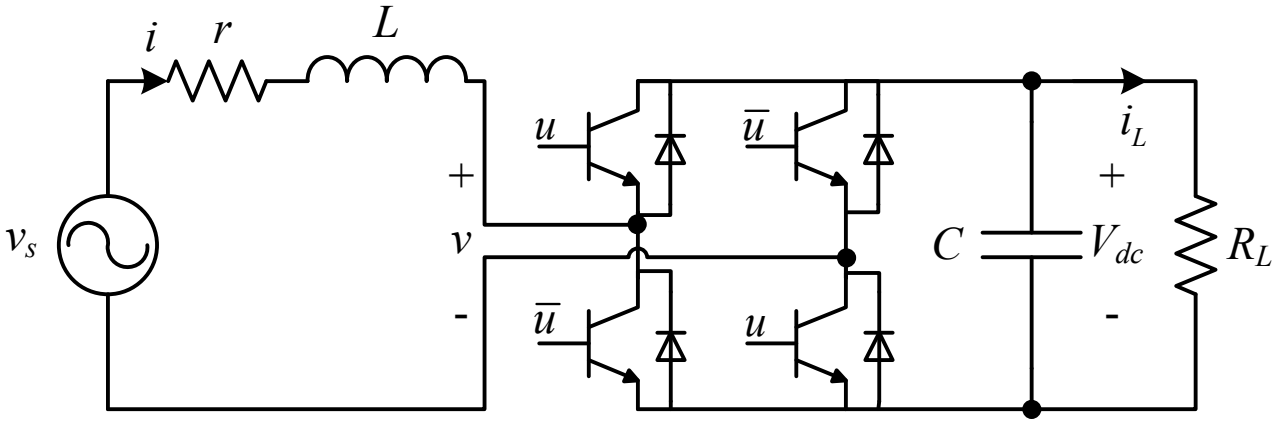

$$L\frac{di}{dt} = -ri - v + v_s$$

$$CV_{dc}\frac{dV_{dc}}{dt} = vi - \frac{V_{dc}^2}{R_L}$$

Control tasks:

- dc output voltage regulation at V_{dc}^{ref}
- unity power factor operation (ac side)

Control input: converter voltage v

Traditional control of rectifiers

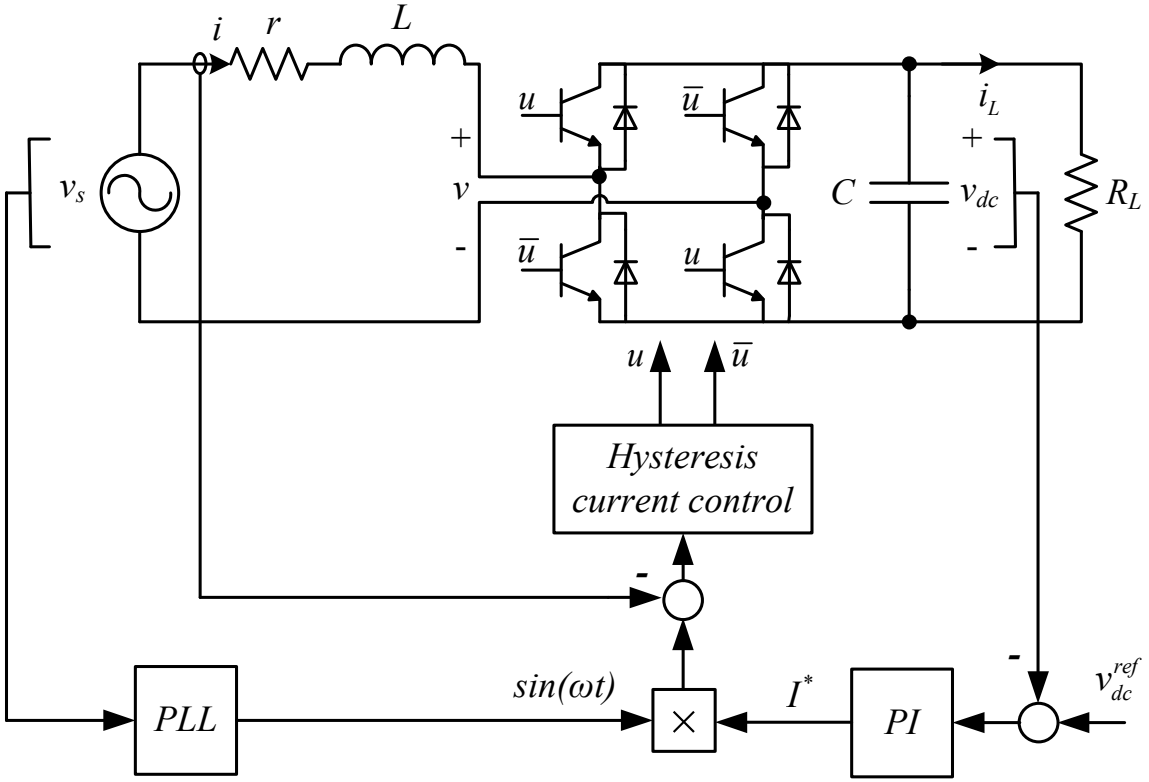

- Outer-loop PI controller for voltage regulation
- Inner-loop Hysteresis controller for current control

$\longrightarrow$ stability and a given limit for the input current are not guaranteed, requires a PLL

Current limiting non-linear controller

Current limiting non-linear controller (CLNC):

$$
\begin{aligned}
v(t) &= w(t)i(t) \\
\begin{bmatrix} \dot{w} \\ \dot{w}_q \end{bmatrix} &= \begin{bmatrix} 0 & cw_q\left(V_{dc} - V_{dc}^{ref}\right) \\ -\frac{cw_q}{\Delta w_{max}^2}\left(V_{dc} - V_{dc}^{ref}\right) & -k\left(\frac{(w-w_m)^2}{\Delta w_{max}^2} + w_q^2 - 1\right) \end{bmatrix} \begin{bmatrix} w - w_m \\ w_q \end{bmatrix}
\end{aligned}
$$

with $c, k, w_m, \Delta w_{max} > 0$.
If the output voltage V_{dc} is regulated at V_{dc}^{ref}, then $w = w^*$ and

$$v(t) = w^* i(t)$$

which guarantees unity power factor at the input of the rectifier.

Experimental results

normal operation: $V_{dc}^{ref} = 90V \rightarrow 115V$

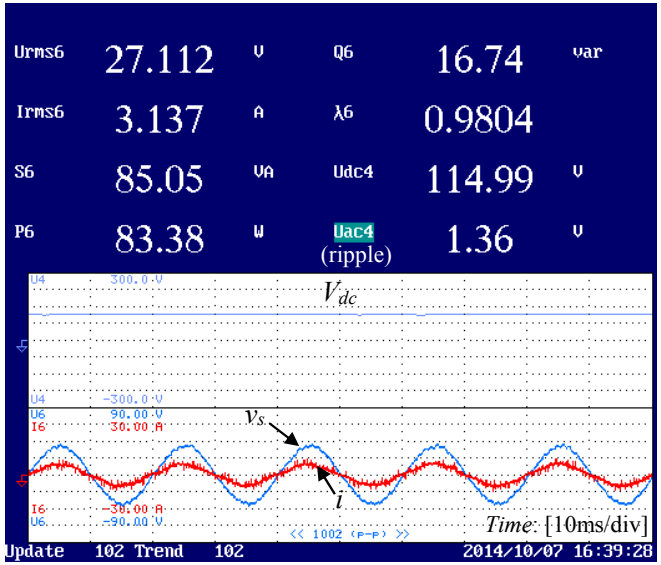

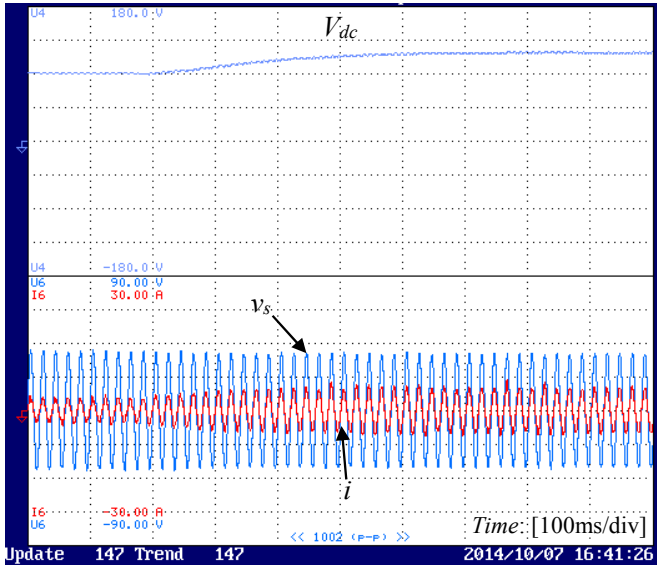

current limit with $I_{max} = 4A$: $V_{dc}^{ref} = 90V \rightarrow 140V$

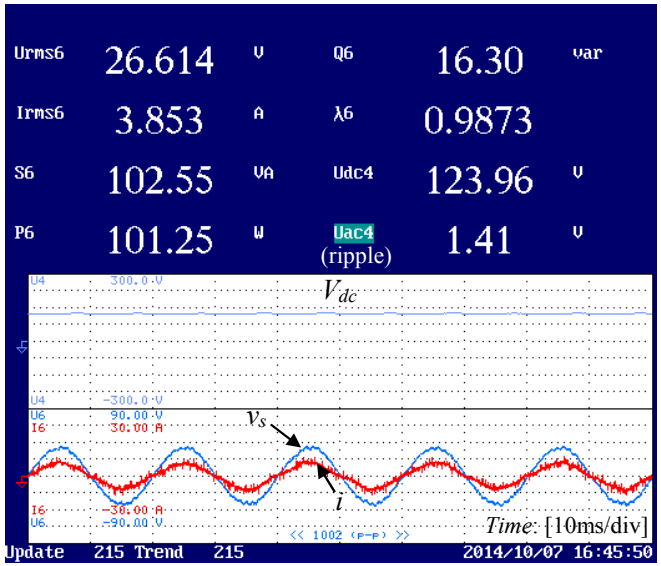

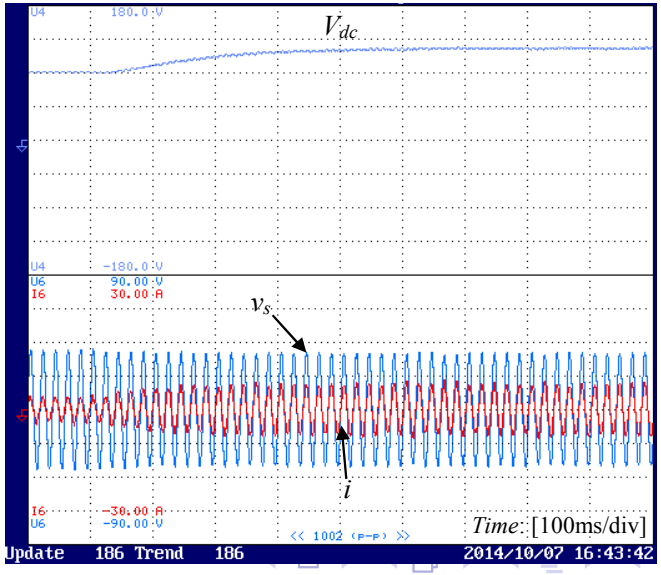

Outline

- Introduction
- Model of some typical Power & Energy Systems
- Non-linear control theory
  - Dissipative Hamiltonian form
  - Oscillator-based non-linear controller
  - Bounded integral controller (BIC)
- Applications
  - DC/DC boost converter (energy storage, PV)
  - Wind power
  - Parallel operation of inverters
  - Grid-friendly inverters (Synchronverters): CAPS
  - Rectifiers with limited current
- Summary

The University Of Sheffield. CAPS Control and Power Systems

Summary

Stability and advanced operation of power systems require:

- accurate system modelling (average analysis $\rightarrow$ dissipative Hamiltonian structure)
- non-linear control design (parameter-free)
  - Oscillator-based non-linear controller
  - Bounded integral controller
- Non-linear system analysis
  - Passivity analysis
  - zero-gain property of the controller
  - convergence to the desired equilibrium

The University Of Sheffield. CAPS Control and Power Systems

Control applications

- Power converters
- Renewable energy systems (wind, solar, etc.)
- Parallel operation of inverters
- Grid-friendly inverters (Synchronverters)
- many more...

Non-linear control theory can change the way power systems have been treated so far!

Control applications

- Power converters
- Renewable energy systems (wind, solar, etc.)
- Parallel operation of inverters
- Grid-friendly inverters (Synchronverters)
- many more...

Non-linear control theory can change the way power systems have been treated so far!