Design of Steel-Concrete Composite Bridges for Rapid Disassembly, Repair or Replacement: Smart Structural Details, Full-Scale Tests, and Design Rules

Professor Theodore L. Karavasilis

Professor of Structures and Structural Mechanics
Head of Structural Engineering
Faculty of Engineering and the Environment
University of Southampton

Outline

- Resilience (short-term vs long-term stressors)
- Steel-concrete composite bridges and the need for resilience against long-term stressors
- The LNSC shear connector
- Experimental program
- Results
- Conclusions

Structure under short-term stressors

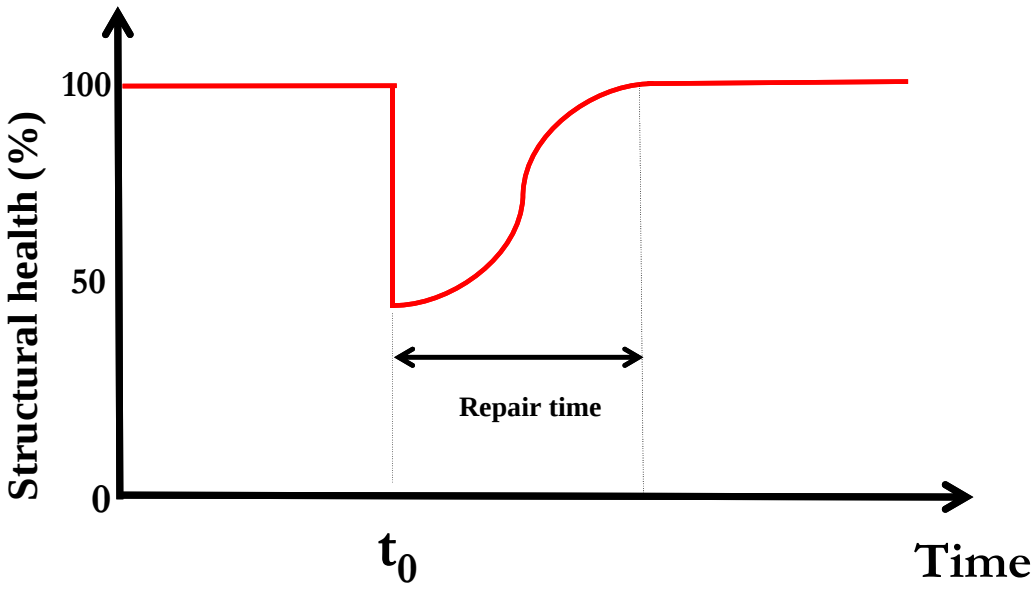

- t_o: time of occurrence of strong earthquake, hurricane, tsunami
- Difficult-to-repair damage
- Long repair time
- Disruption to services and occupation
- High socio-economic losses

Resilient vs non-resilient structures under short-term stressors

Non-resilient structure - repair time is long

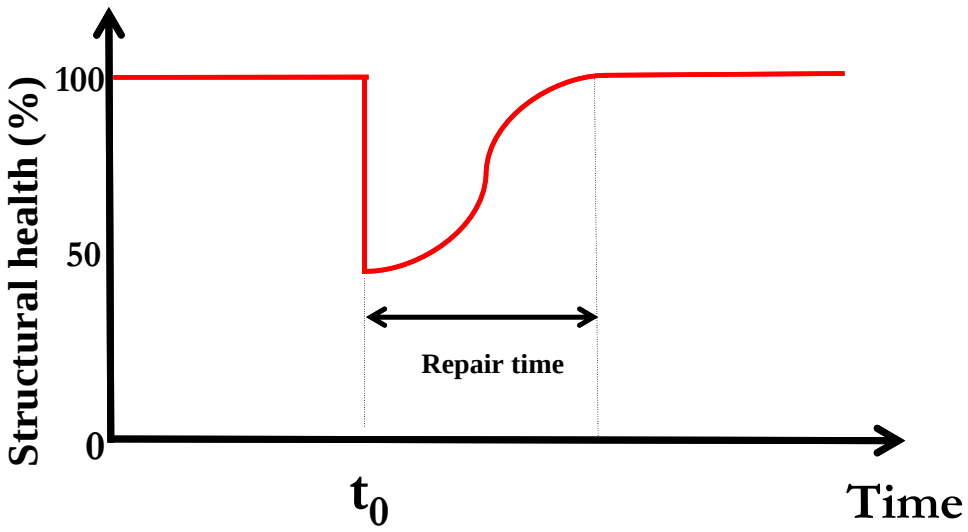

Resilient structure – repair time is short

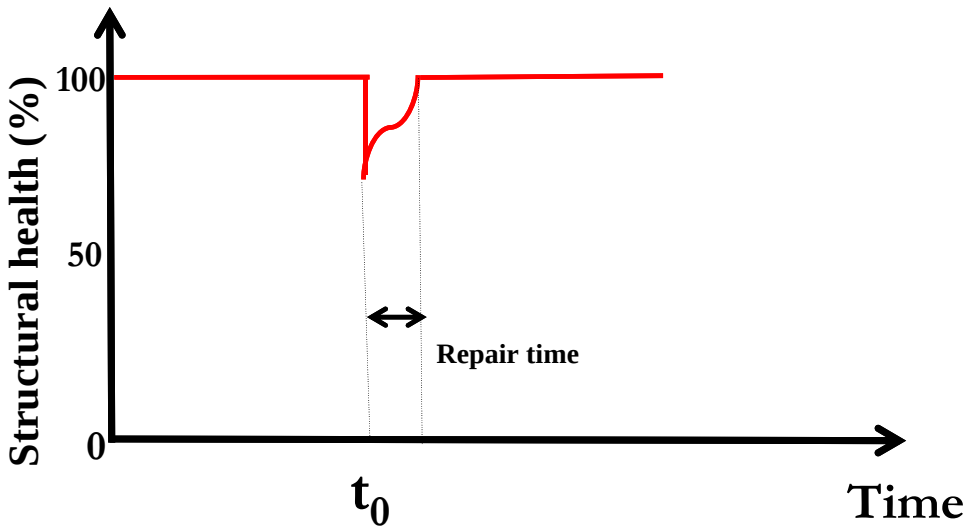

Structure under long-term stressors

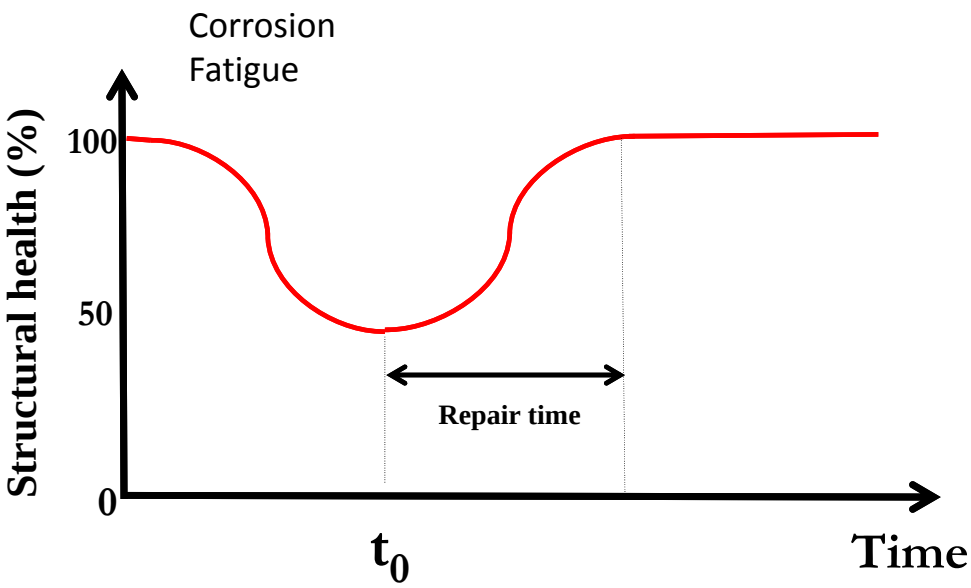

- t_0: time of detection of damage (inspection or structural health monitoring program)

Resilient vs non-resilient structures under long-term stressors

Non-resilient structure - repair time is long

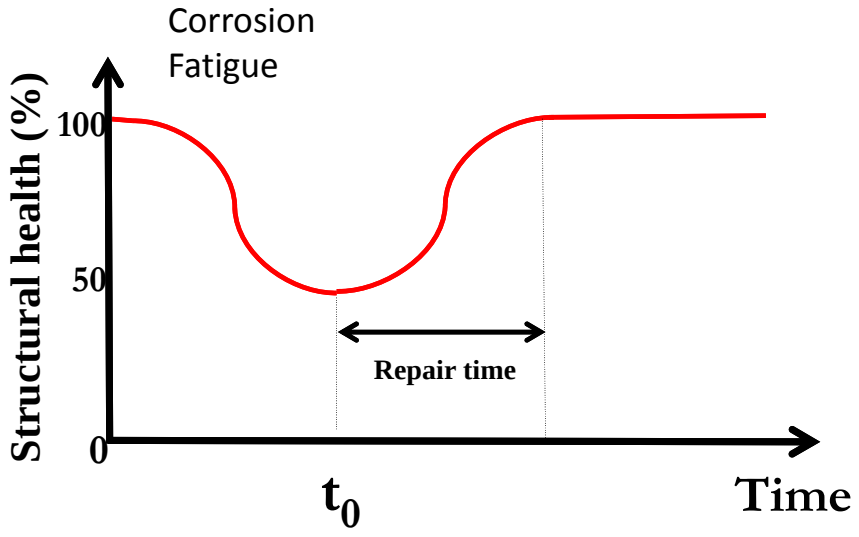

Resilient structure – repair time is short

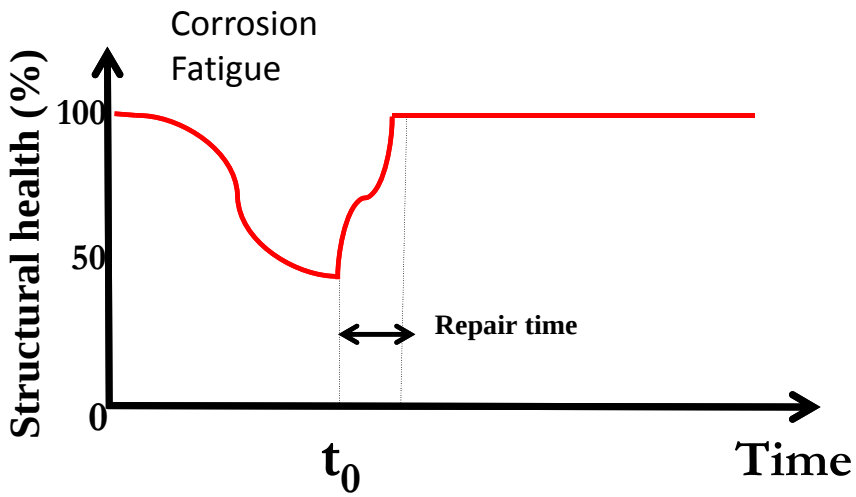

Outline

- Resilience (short-term vs long-term stressors)
- Steel-concrete composite bridges and the need for resilience against long-term stressors
- The LNSC shear connector
- Experimental program
- Results
- Conclusions

Steel-concrete composite bridges

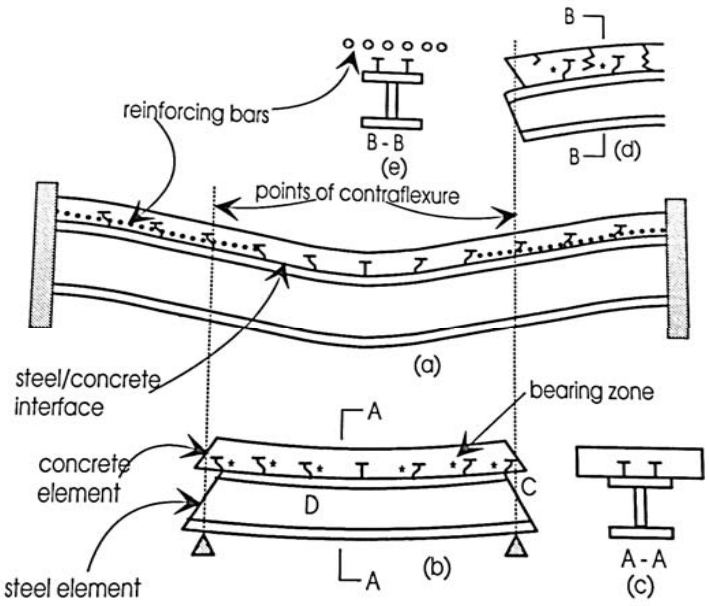

Deformation of composite beam

Well-known advantages

- Superior stiffness/strength
- Speedy installation
- Economy

Steel-concrete composite bridges

- Increases in traffic flow
- Increases in the allowable weight of vehicles compared to those considered in the initial design
- Use of de-icing salts (especially in regions of cold climates)
- Poor quality of construction materials
- Low maintenance

- One third of the 607,380 bridges in the USA are in need of maintenance (ASCE 2013)
- Deterioration is an important issue for bridges in Europe (PANTURA 2011)

- Decks are typically deteriorating faster than other bridge components
- The decks of 33% of the bridges in the USA are in need of repair/replacement after an average service life of 40 years (ASCE 2013)
- Replacement of the deck is the typical maintenance decision because repair methods do not ensure adequate extension of the bridge lifespan (Deck et al. 2016)

Steel concrete-composite bridges under long-term stressors

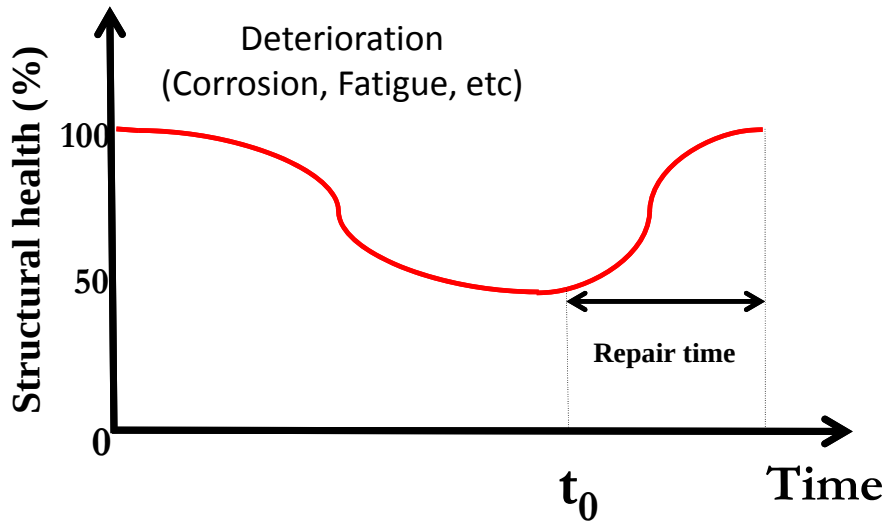

- Monolithic connection (welded studs embedded within the concrete slab)
- Repair or replacement of a deteriorating deck or other component is a costly and time-consuming process due to the monolithic connection between the steel beam and the concrete slab
- Long traffic interruption and associated socio-economic losses

We need a step change in our bridge design philosophy to ensure resilience against long-term stressors

- Extension of the bridge *lifespan* shall become a major design goal
- A possible way is to develop bridges that allow disassembly without compromising structural performance and integrity
- Disassembly offers the unique advantage of easy replacement of deteriorating structural components (e.g. deck of steel-concrete composite bridges) with *minimum disturbance* to traffic flow
- This of particular importance as demands on bridges will increase dramatically in the future due to *urbanisation* and *climate change*

Resilience in steel concrete-composite bridges

Resilience in precast steel-concrete composite bridges through design for disassembly and rapid repair or replacement

- Calls for a demountable shear connector that will allow rapid and easy separation of the slab from the beam

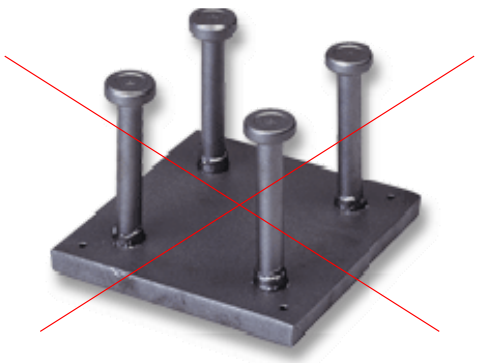

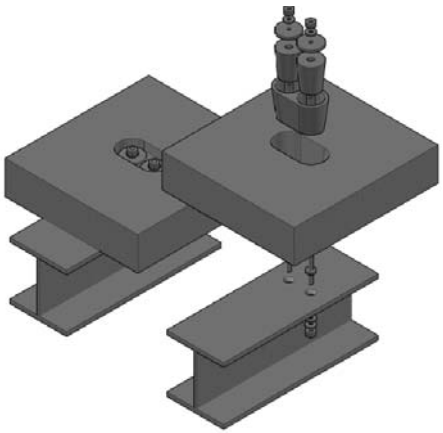

Resilient bridge – repair time is short

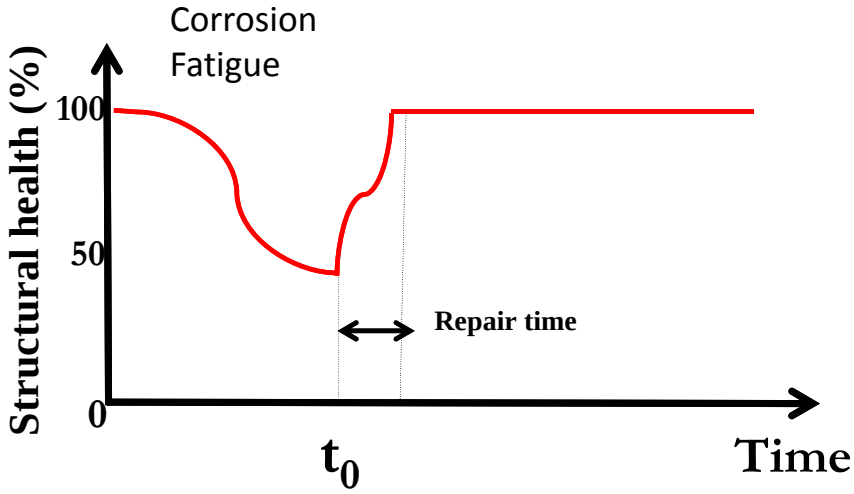

Research goal

Develop a demountable shear connector without compromising structural performance!

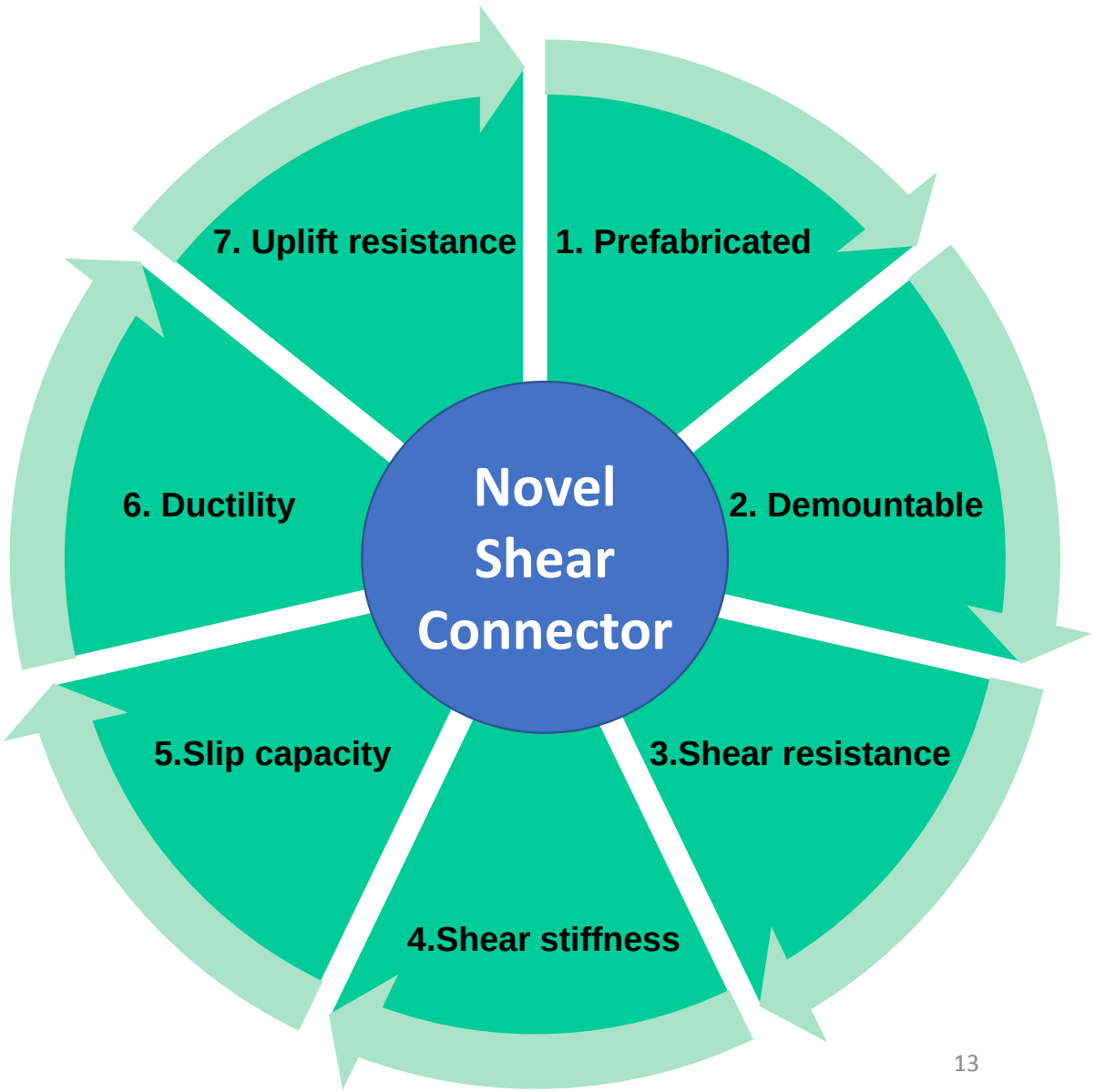

Previous developments (non-embedded in the slab)

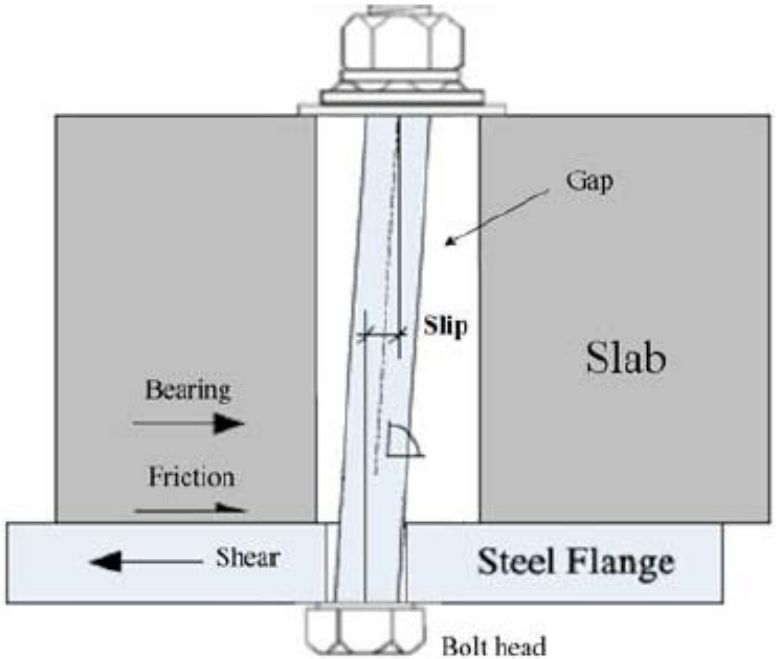

Lee and Bradford (2013)

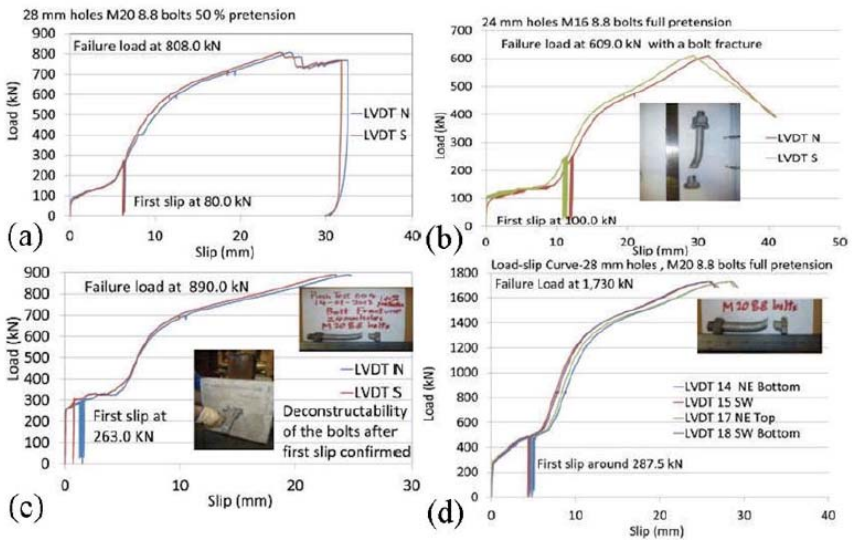

- Construction tolerances
- Gaps in the steel beam – precast slab interfaces may prevent adequate bolt fastening and cause slab cracking
- Slip of the bolt
- Large shear strength and slip capacity
- Slab and shear connector are removable

Previous developments (embedded in the slab)

Lam and Saveri (2012)

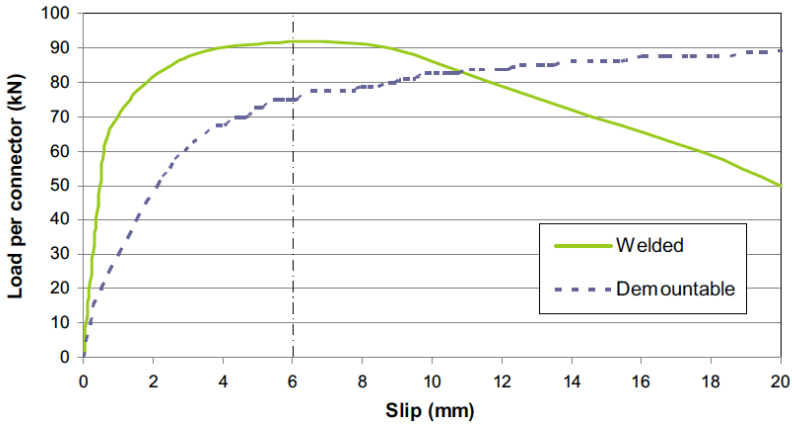

- Lower initial stiffness
- Lower strength (at 6 mm slip)
- Shear connector is fully embedded in the slab (slab is removable, shear connector is non-removable)

Outline

- Resilience (short-term vs long-term stressors)
- Steel-concrete composite bridges and the need for resilience against long-term stressors
- The LNSC shear connector
- Experimental program
- Results
- Conclusions

Locking-Nut Shear Connector (LNSC) - Main components

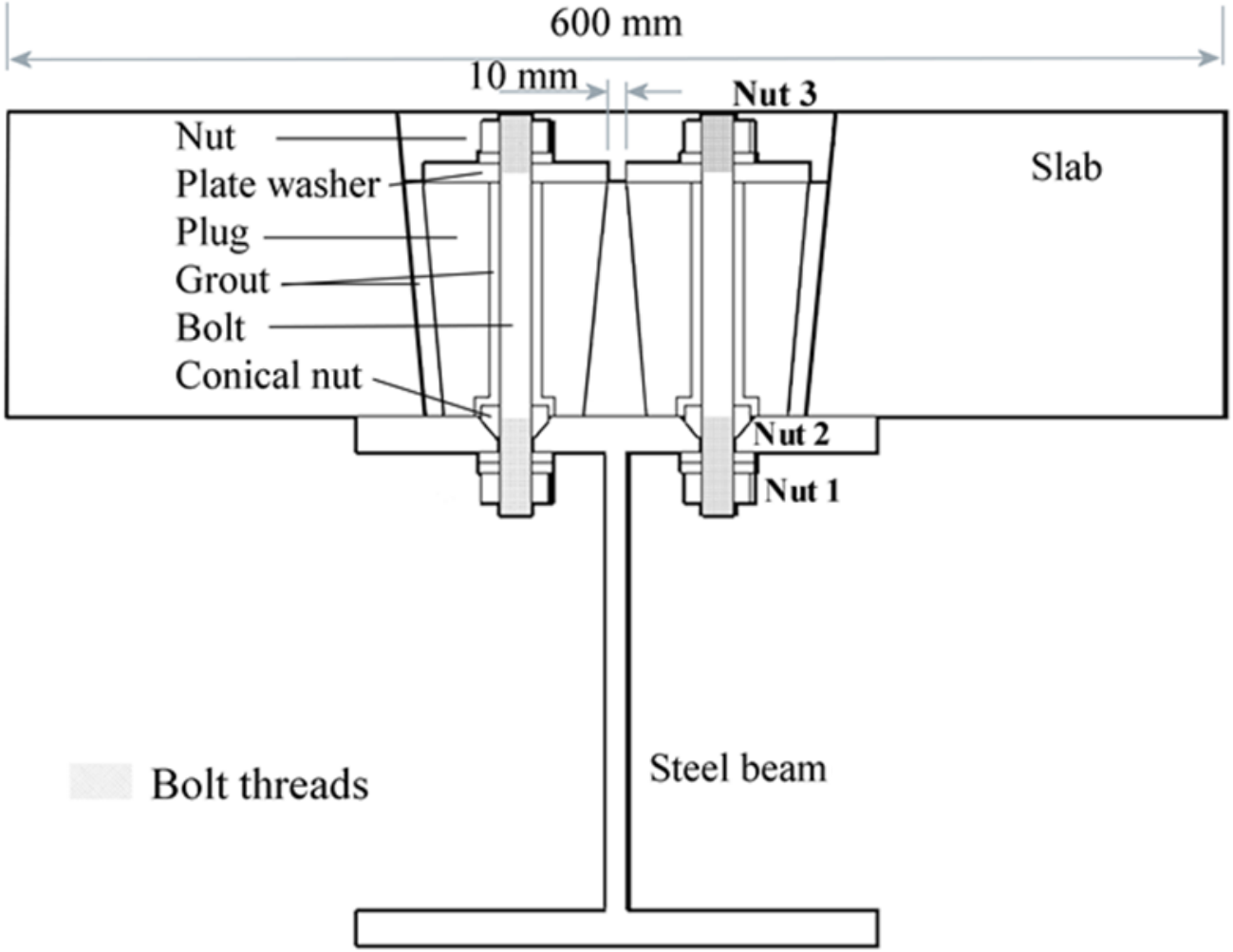

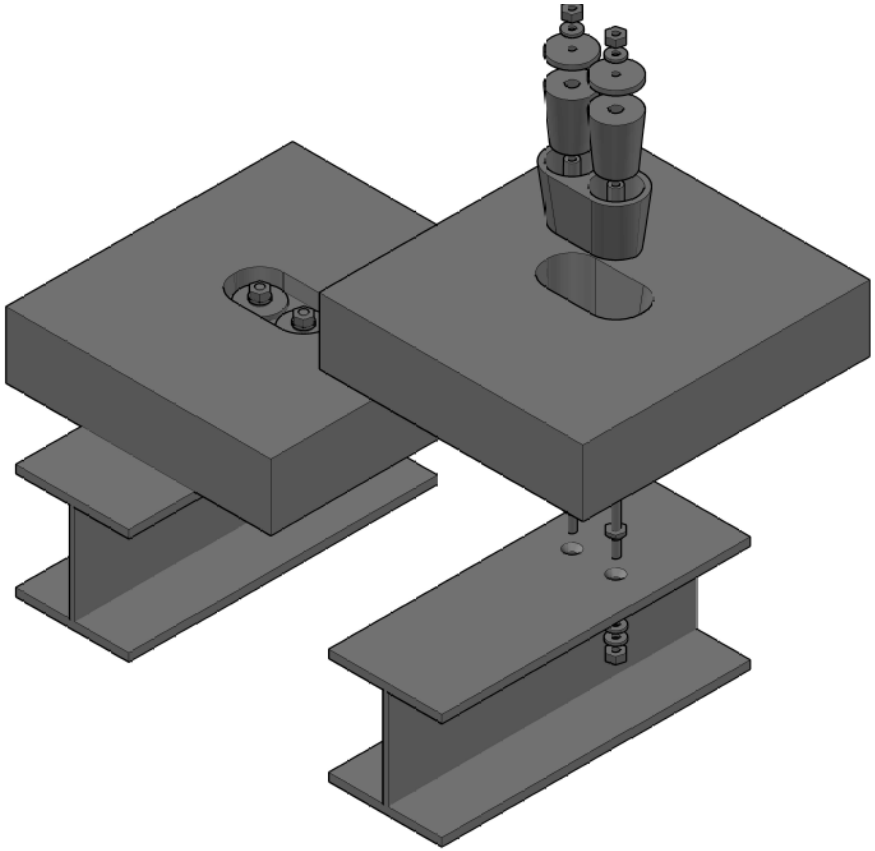

Construction step 1

- A pair of high strength steel bolts are fasten at the upper beam flange
- Bolting is achieved with a carefully designed double nut configuration
- The bolt hole has a chamfered finish at the upper surface following a 60-degree angle to form a countersunk seat
- The upper nut has a conical shape to fit in the countersunk seat
- The lower nut is fasten (**bolt is locked in the steel flange**) to prevent bolt slip
- The beam is transferred to the site

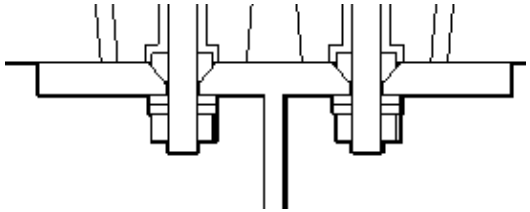

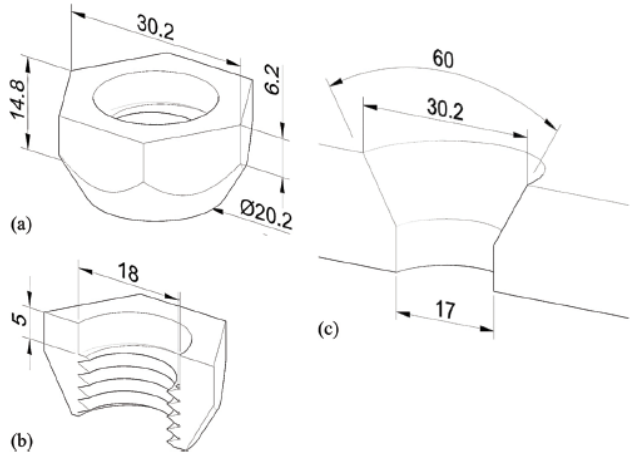

Construction step 2

- The slab is prefabricated with tapered holes following a 5-degree inclination to form an inverted conical oval shape

- Precast planks are transferred to the site and positioned on the top of the beam

- Each pair of bolts coincides **approximately** with the center of a slab hole (**no construction tolerance issues**)

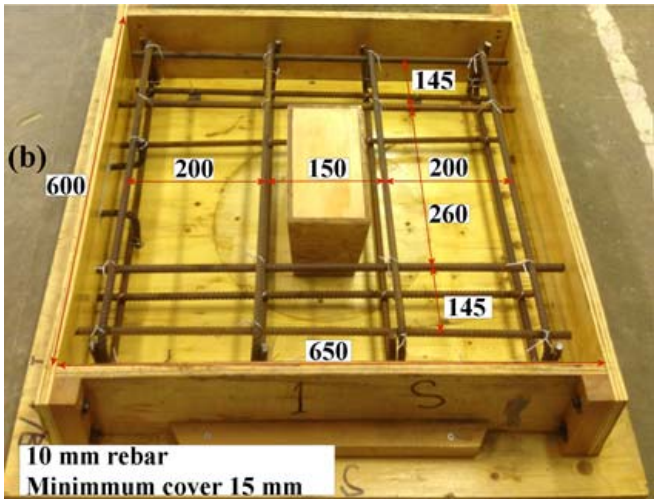

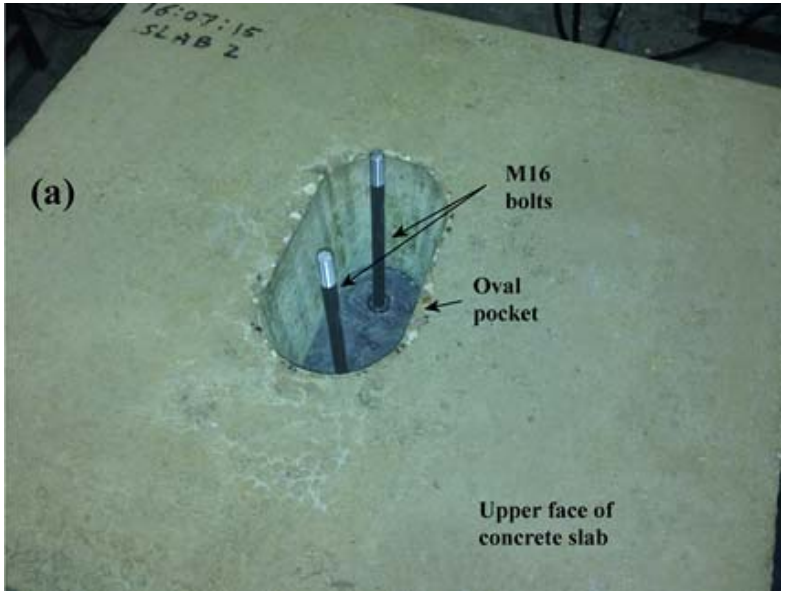

Construction step 3

- Two inverted conical precast concrete units (plugs), identical in inclination with the slab pockets, are positioned in the slab pocket

- Each plug has a central circular hole to accommodate a bolt (<u>no construction tolerance issues</u>)

- Cement grout is used to fill the gaps between the bolts and the plugs, and, the gaps between the plugs and the slab

- Nut on the top of the plugs is tightened to hold the plugs down before grout hardening

Construction does not involve working underneath the bridge deck!

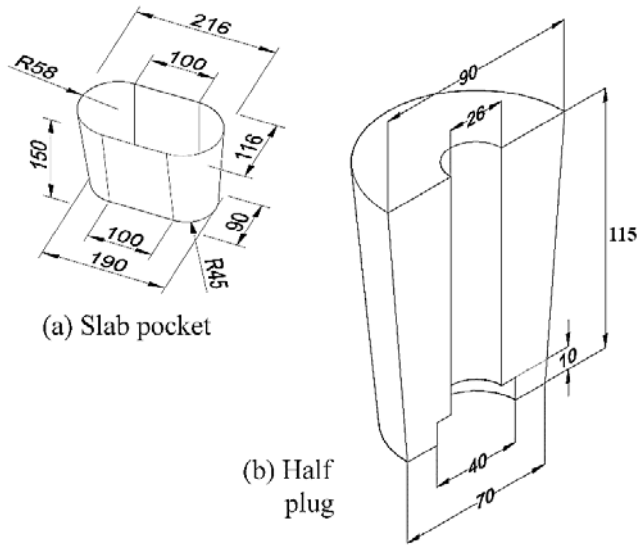

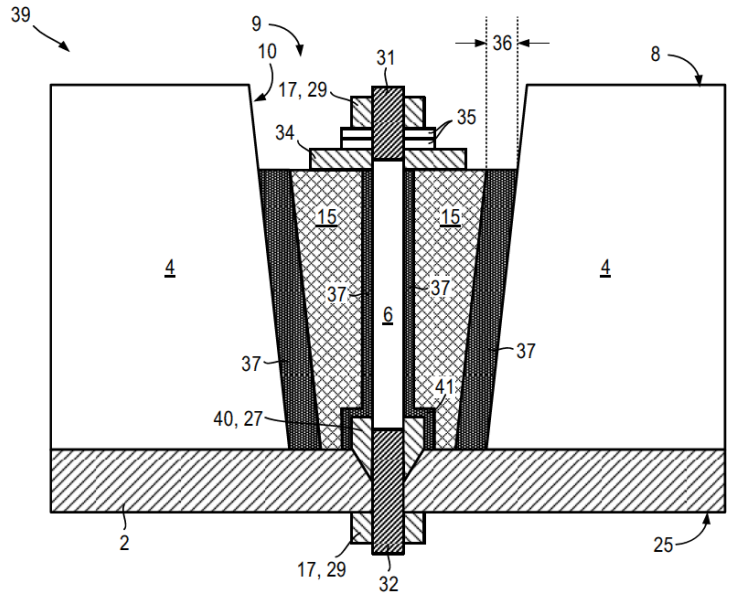

Disassembly (method 1)

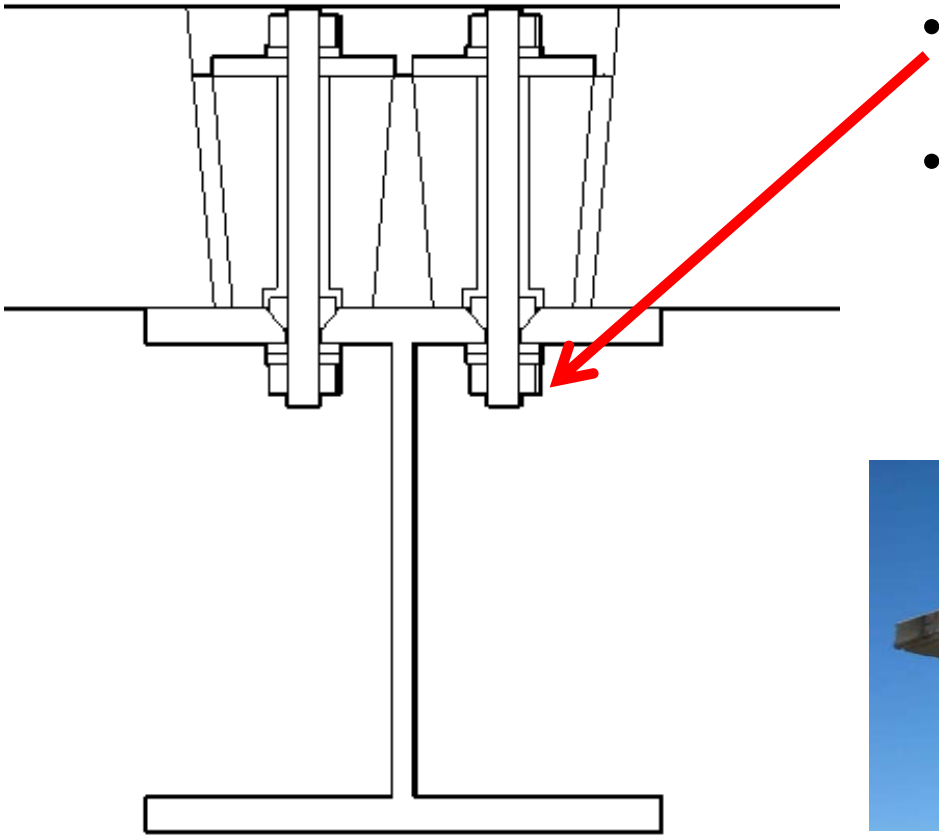

- Unfasten lower nuts
- Slab and shear connectors can be uplifted as a whole

Disassembly (method 2)

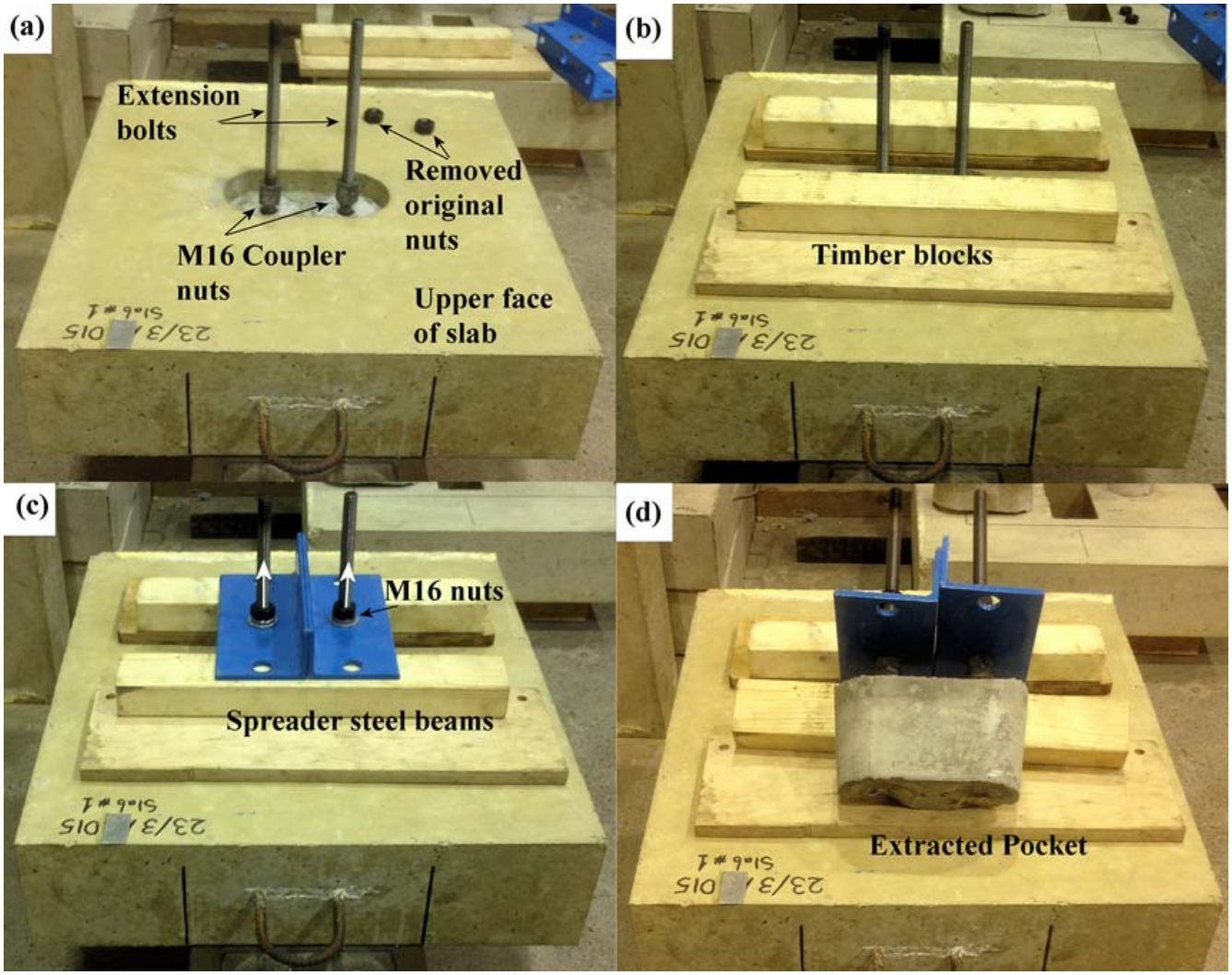

Outline

- Resilience (short-term vs long-term stressors)
- Steel-concrete composite bridges and the need for resilience against long-term stressors
- The LNSC shear connector
- Experimental program
- Results
- Conclusions

Standard pushout test per Eurocode 4

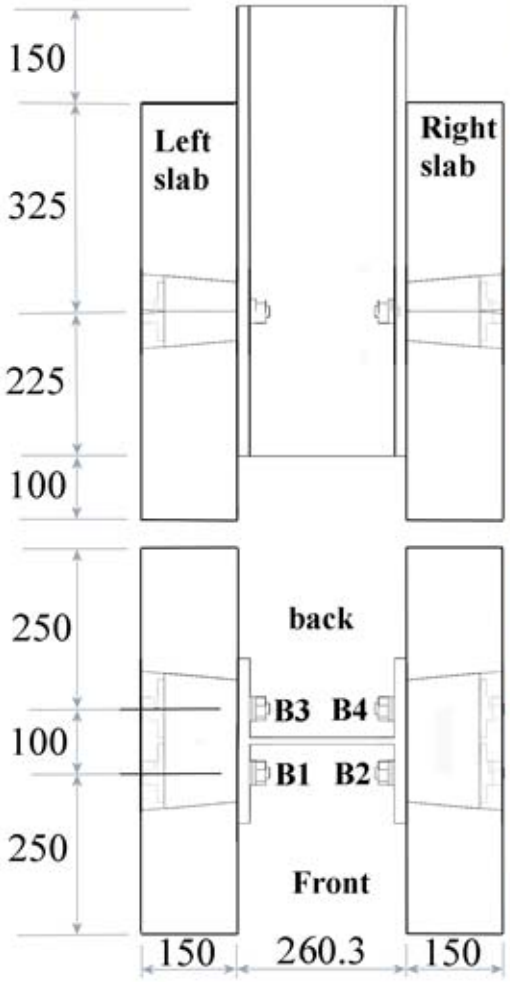

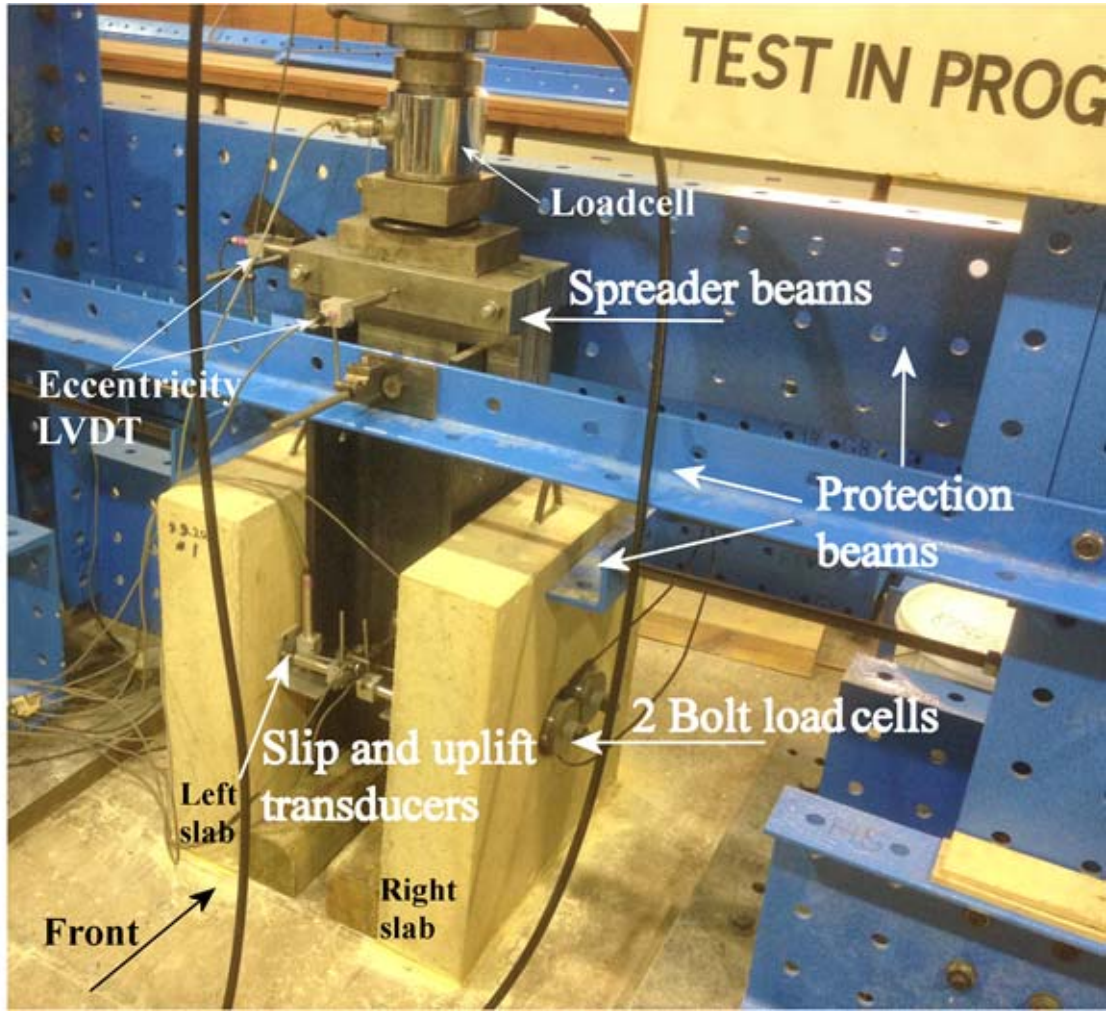

Pushout Specimens and Material Properties

Test No.	8.8 Bolt Dia. (mm)	Bolt preloads (kN)		Slabs (mean)		Plugs (mean)		Grout (mean)
		Nuts 1–2*	Nuts 2-3*	Comp. str. (MPa)	Tensile str. (MPa)	Comp. str. (MPa)	Tensile str. (MPa)	Comp. str. (MPa)
1	16	88-106	88-106	31	2.5	65	4.2	122
2	16		0.0					
3	16	88-106	88-106	31	2.5	65	4.2	-
4	16	88-106	10	31	2.5	83	5.2	43
5	16	88-106	88-106	37	-	71	4.3	58
6	16	64	55-70	41	4.0	86	5.1	44
7	12	47-56	24**	50	4.0	91	4.8	28
8	14	68-81	23**	50	4.0	95	4.6	32
9	16	failed	23**	42	3.6	80	4.8	39
10	16	88-106	24**	43	3.1	50	3.7	27
11	16	88-106	26**	43	3.2	96	4.8	28
12	16	88-106	26**	42	3.5	91	4.9	28

Outline

- Resilience (short-term vs long-term stressors)
- Steel-concrete composite bridges and the need for resilience against long-term stressors
- The LNSC shear connector
- Experimental program
- Results
- Conclusions

Three identical tests - 8.8 M16 bolts

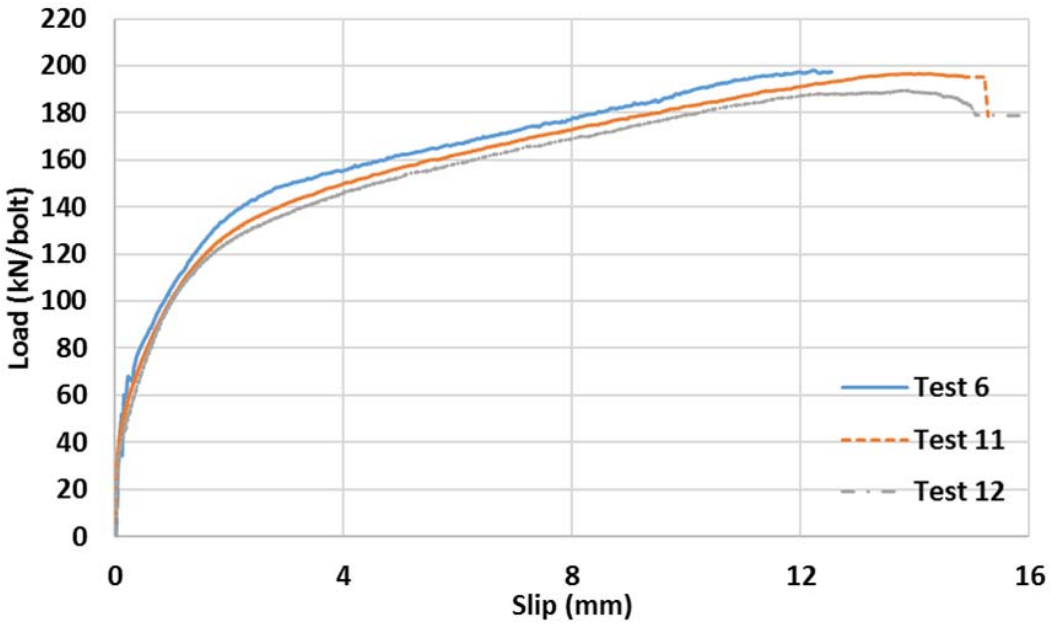

- Negligible scatter in the load – slip behaviour
- Superior strength (characteristic value equal to171 kN!)
- Superior slip displacement capacity (more than 12 mm!)
- <u>No slip of the bolt</u>

Test number	Ultimate load (kN)	Slip capacity (mm)
6	198.1	12.2
11	196.7	13.9
12	189.5	13.8
Average	194.8	13.3
Standard deviation	3.76	0.779
Error (%)	2	6

Variation in structural behaviour (LNSC vs Welded studs)

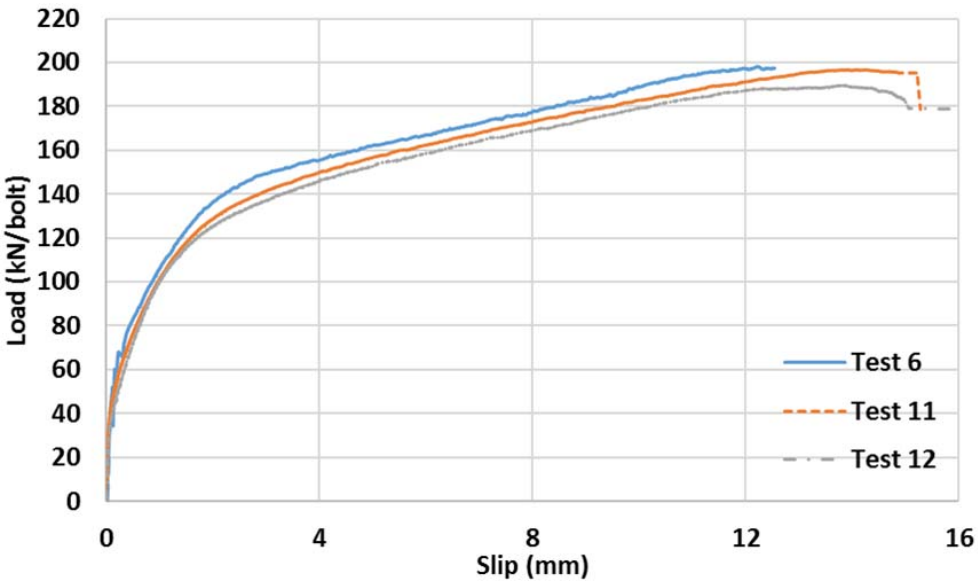

ASCE- J. Bridge Eng. 2008.13:623-634

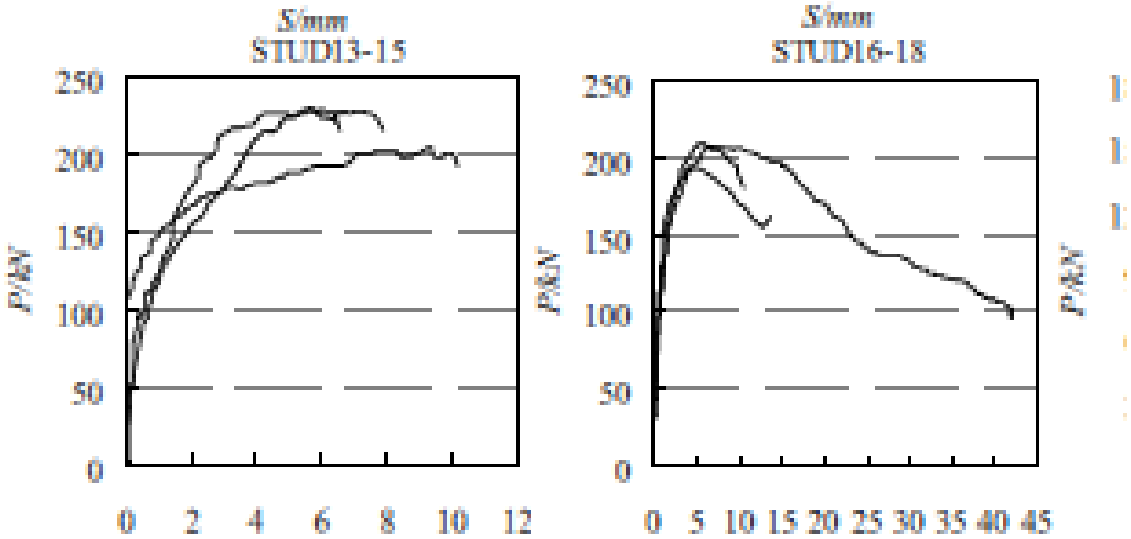

Superior stiffness

- Superior stiffness, i.e. 100 kN/mm for an M16 bolt
- A modest friction resistance exists. Its value is 12 kN, i.e. 5% of the total shear resistance

Behaviour up to 1 mm and shear force equal to 100 kN, i.e. 50% of the shear resistance

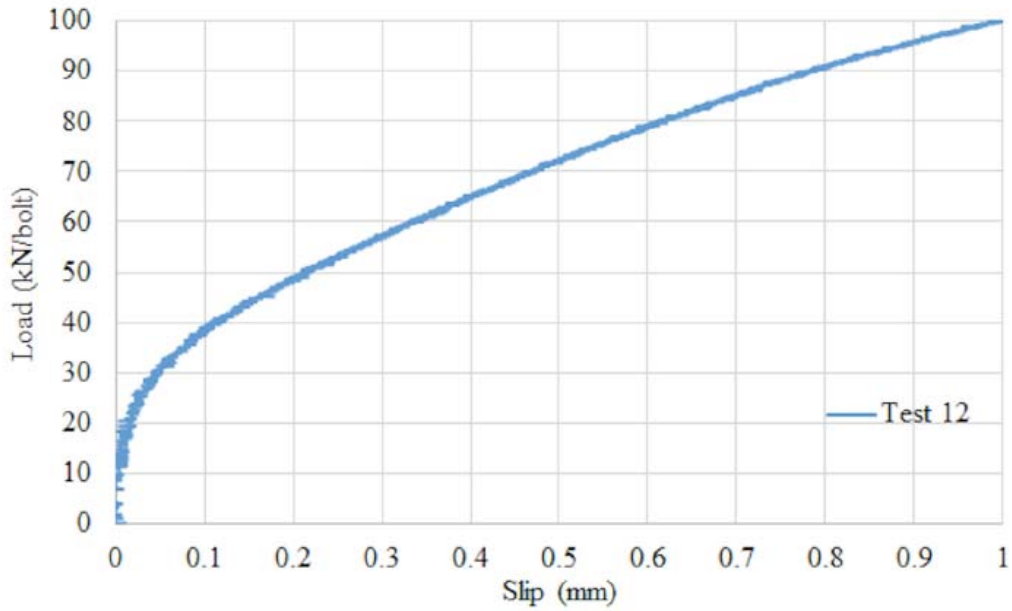

How the LNSC achieves its high stiffness, strength, slip capacity, and low variability in the shear load – slip displacement behaviour?

- Use of high strength (Grade 8.8 in the tests) bolts
- Use of high-strength concrete for the plugs (no need for a high strength concrete slab!)
- High-strength concrete plugs are under nearly triaxial stress confinement conditions – they can develop significantly higher compressive stresses than their design strength
- The LNSC fails **always** due to fracture in the bolts and not due to concrete crushing (concrete is under confinement conditions!)
- The LNSC ensures that shear failure in the bolts takes place in their un-threaded length (threads are hidden in the conical nut!)
- Smooth flow-able grout around the bolts without variation in voids and aggregates

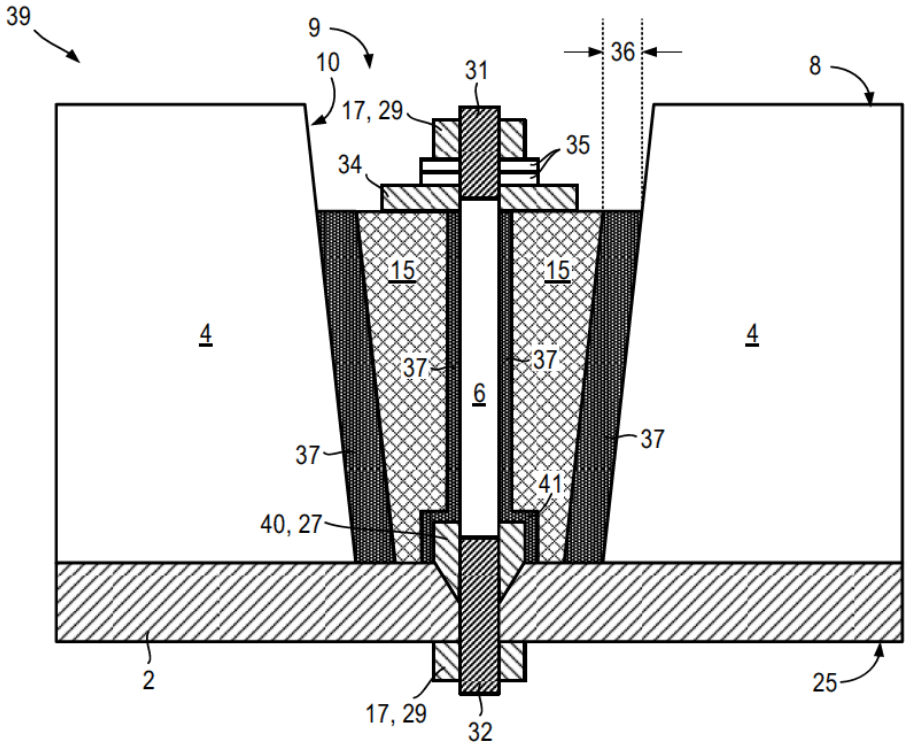

Resistance against slab uplift

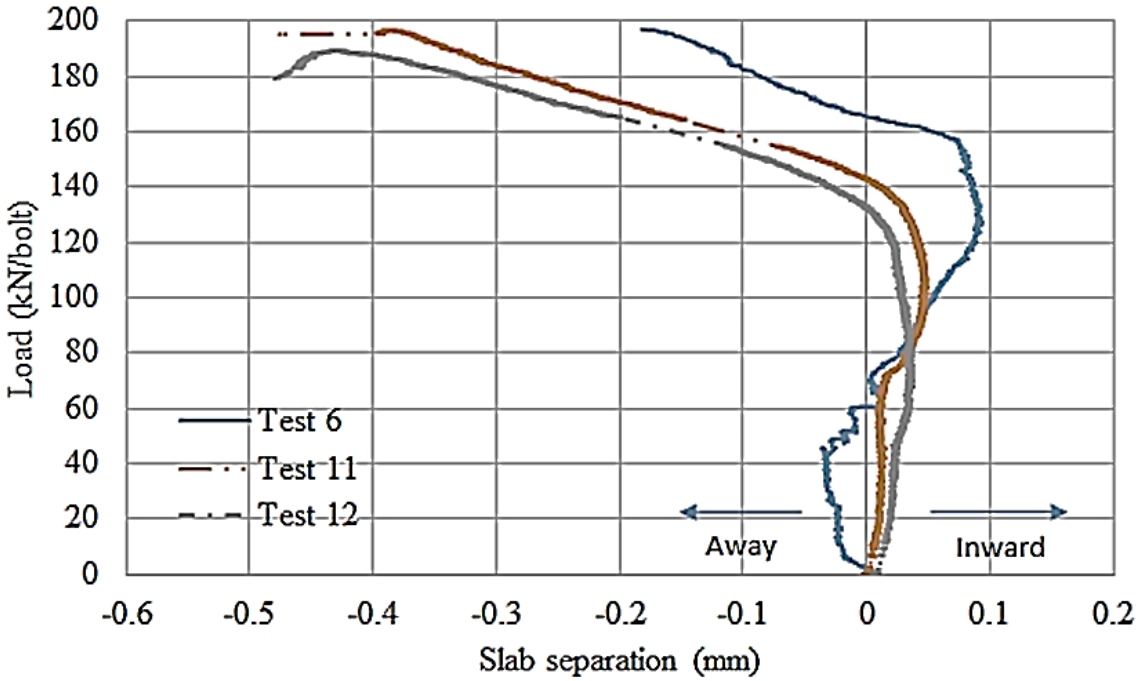

At load equal to 80% of the shear resistance, the slab uplift is only 4% of the corresponding slip displacement!

Effect of bolt diameter

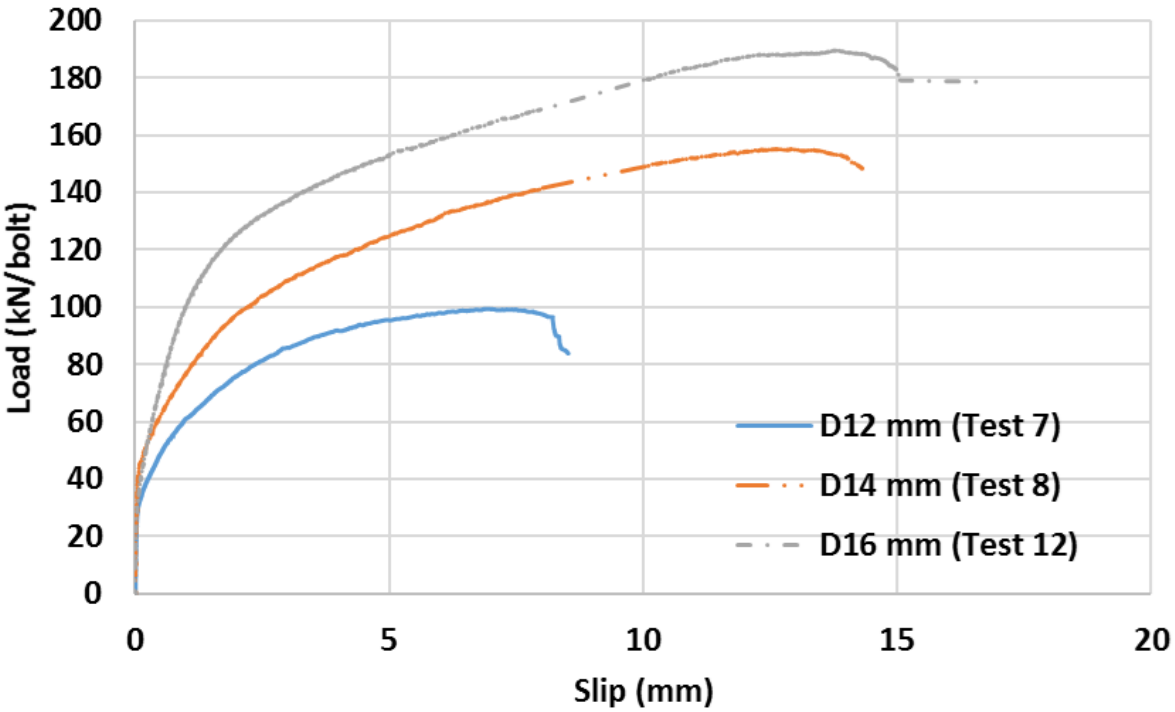

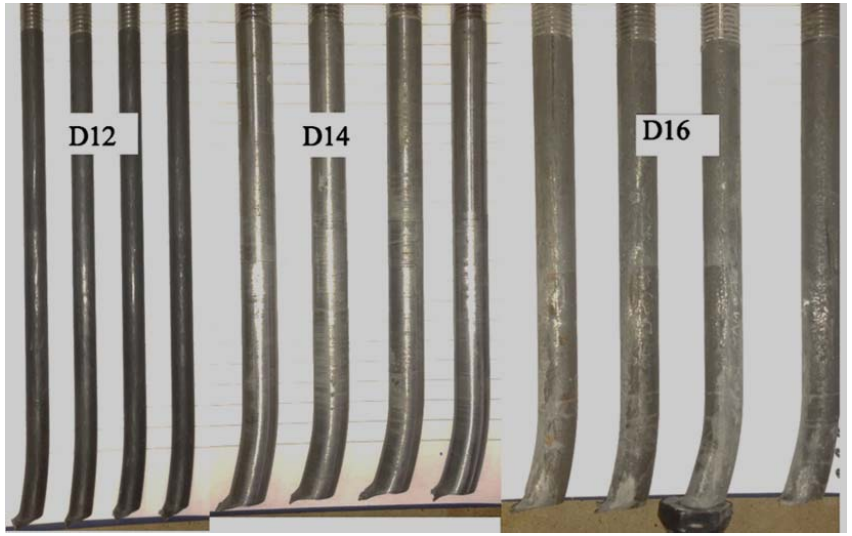

Effect of plug concrete strength

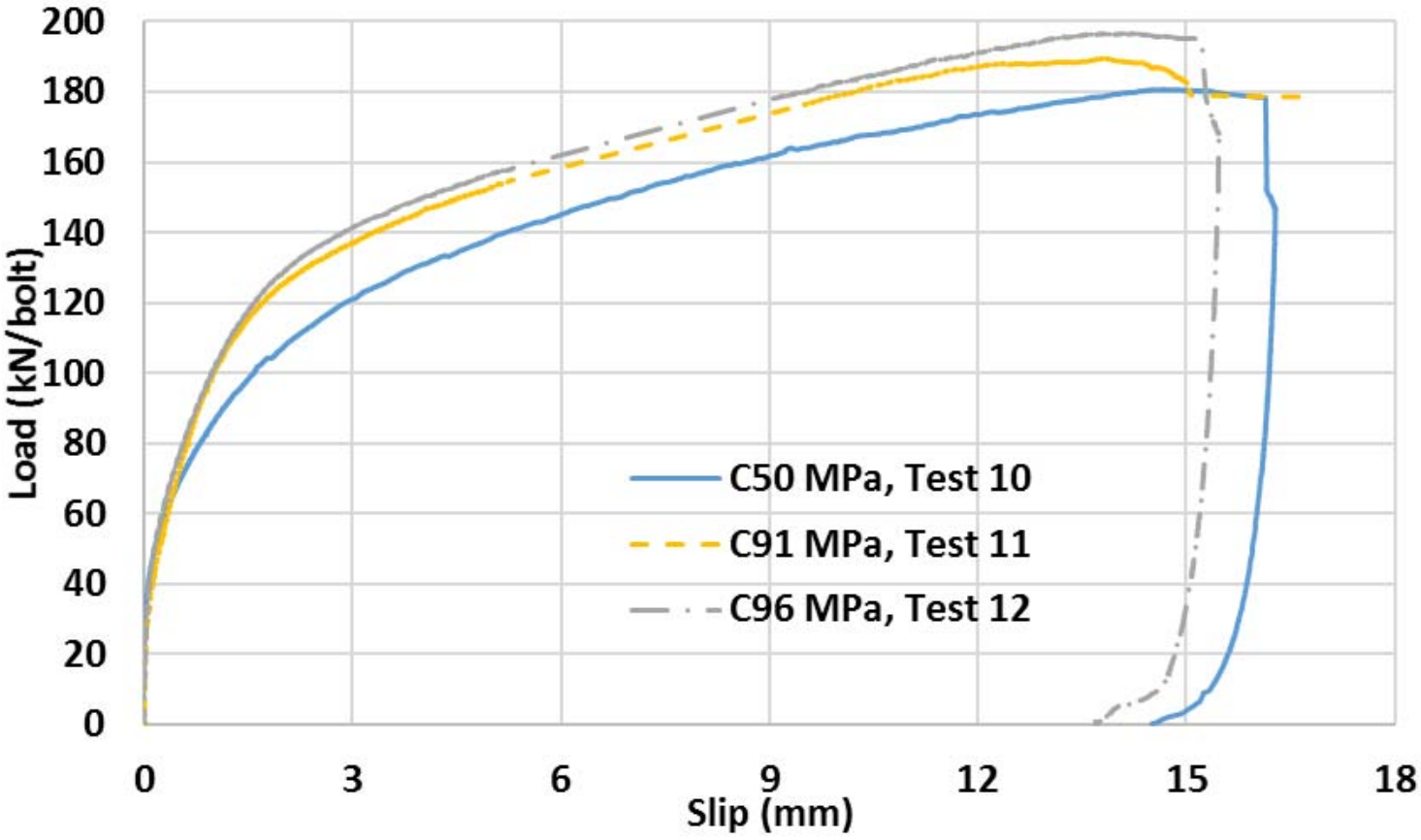

Estimation of shear resistance

Test number	Bolt diameter (mm)	Plug strength (MPa)	Ultimate load (kN)	Eq. (4) (kN)	Error (%)
7	12	91	99.3	107.6	8.0
8	14	95	155.2	149.2	–4.0
10	16	50	180.7	190.7	6.0
11	16	96	196.7	195.5	–1.0
12	16	91	189.5	196.8	4.0

$$P = \frac{\pi d^2 f_u}{4}\left[\frac{0.8}{\cos\beta} + 0.4(\sin\beta + \mu\cos\beta)\right]$$

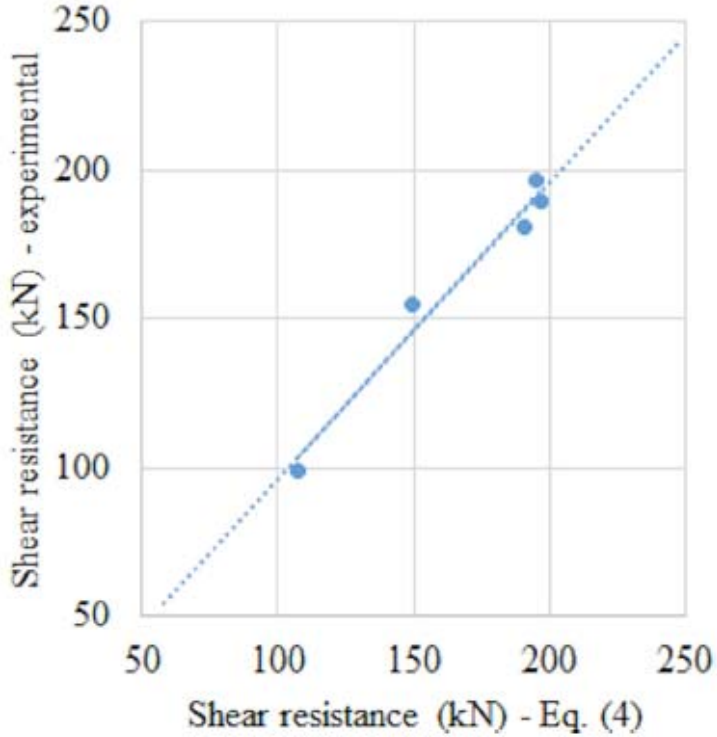

Outline

- Resilience (short-term vs long-term stressors)
- Steel-concrete composite bridges and the need for resilience against long-term stressors
- The LNSC shear connector
- Experimental program
- Results
- Conclusions

Conclusions

- Accelerated bridge construction by promoting prefabrication
- Rapid bridge disassembly, repair and replacement (reduction of socio-economic losses associated with bridge maintenance)
- Failure always due to fracture of a high-strength steel bolt (concrete never fails!)
- Superior shear resistance and stiffness (characteristic values for 8.8 M16 bolt are 172 kN and 100 kN/mm, respectively)
- Superior slip capacity (up to 14 mm)
- Significant stiffness/resistance against slab uplift (less than 4% of the corresponding slip displacement at shear load equal to 80% of the shear resistance)

Recently completed (10 m beam test)






Future research (funded)

- Fatigue evaluation
- Development of FEM models

Acknowledgements

- Engineering and Physical Sciences Research Council of the UK (Impact Acceleration Fund)
- Iraqi Ministry of Higher Education and Scientific Research (PhD scholarship)
- Horizon2020 MSCA IF Fellowship

Details on the LNSC

Suwaed, A. S. H., Karavasilis, T.L. (2017). “Novel Demountable Shear Connector for Accelerated Disassembly, Repair or Replacement of Precast Steel-Concrete Composite Bridges.” *Journal of Bridge Engineering, ASCE, Vol. 9.*

Future publications and related research

https://www.southampton.ac.uk/engineering/about/staff/tk4g16.page

Thank you for your attention!